WWW.DIGITALKHODRO.COM 021 62 99 92 92

ELECTRIC PARKING BRAKE (EPB) SYSTEM

E6305E7E

Electric Parking Brake (EPB) System (1)

SD597-1

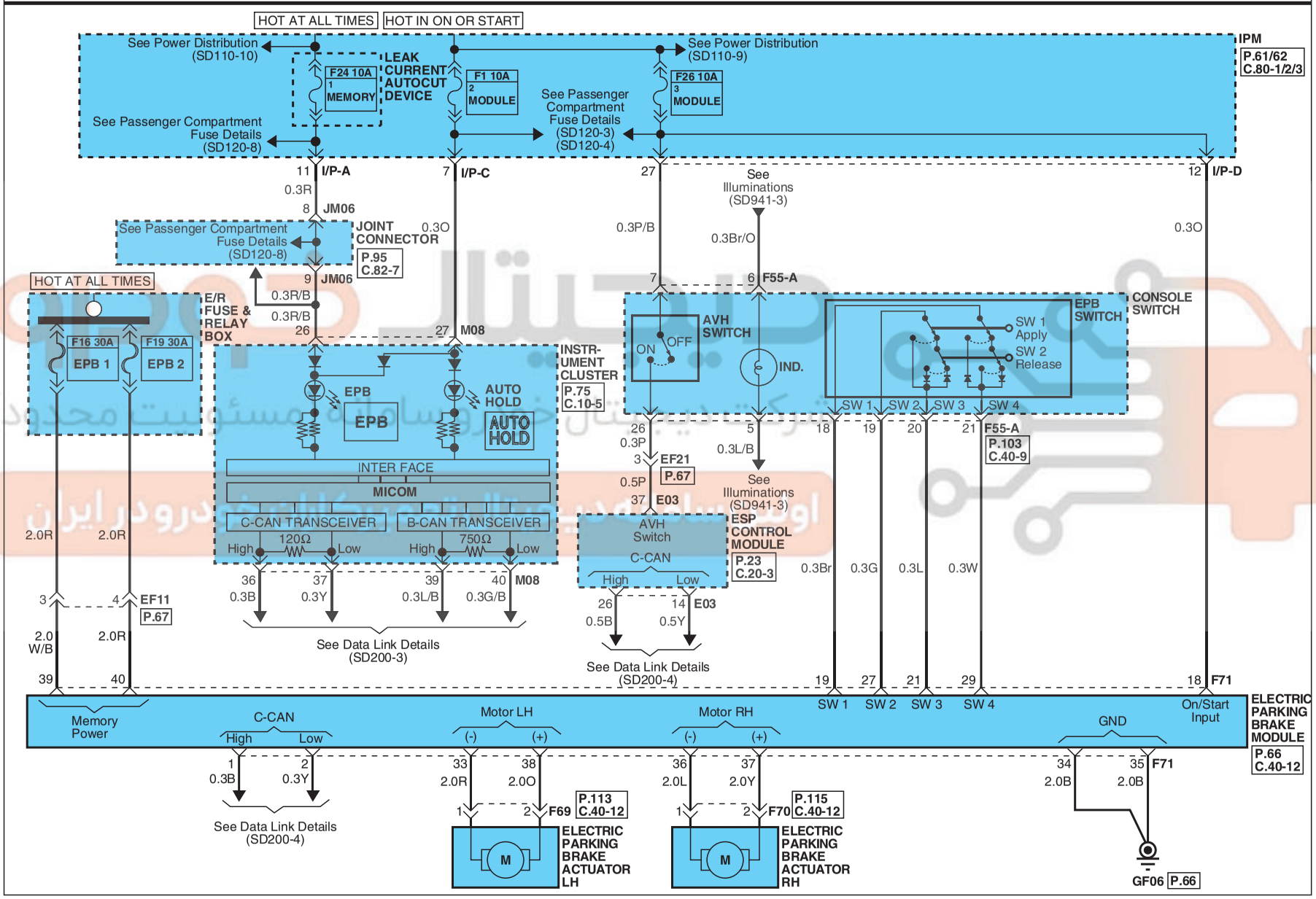

EVGSD12597AL

WWW.DIGITALKHODRO.COM 021 62 99 92 92