3.2 Automatic Transmission/Transaxle

2012 CS35

Table of Contents PAGE

3.2.1 Automatic Transmission

3.2.2 Automatic Transmission/Transaxle - External

Specifications

General Specifications

Description	Specifications
Model	TS - 40 SN
Transmission ratio - first gear	2.875 : 1
Transmission ratio - second gear	1.568 : 1
Transmission ratio - third gear	1.000 : 1
Transmission ratio - fourth gear	0.697 : 1
Reverse	2.300 : 1
Differential	4.277 : 1
Intermediate shaft	1.023 : 1
Planetary gear group	1
Weight	Approx. 54 kg
Max. torque	130 Nm

Component Specifications

Description	Specifications
Automatic transmission fluid - specification	AW - 1
Automatic transmission fluid - total volume (including cooler and tube)	4.4 ~ 4.8 L
Level adjustment	Overflow type

Torque Specifications

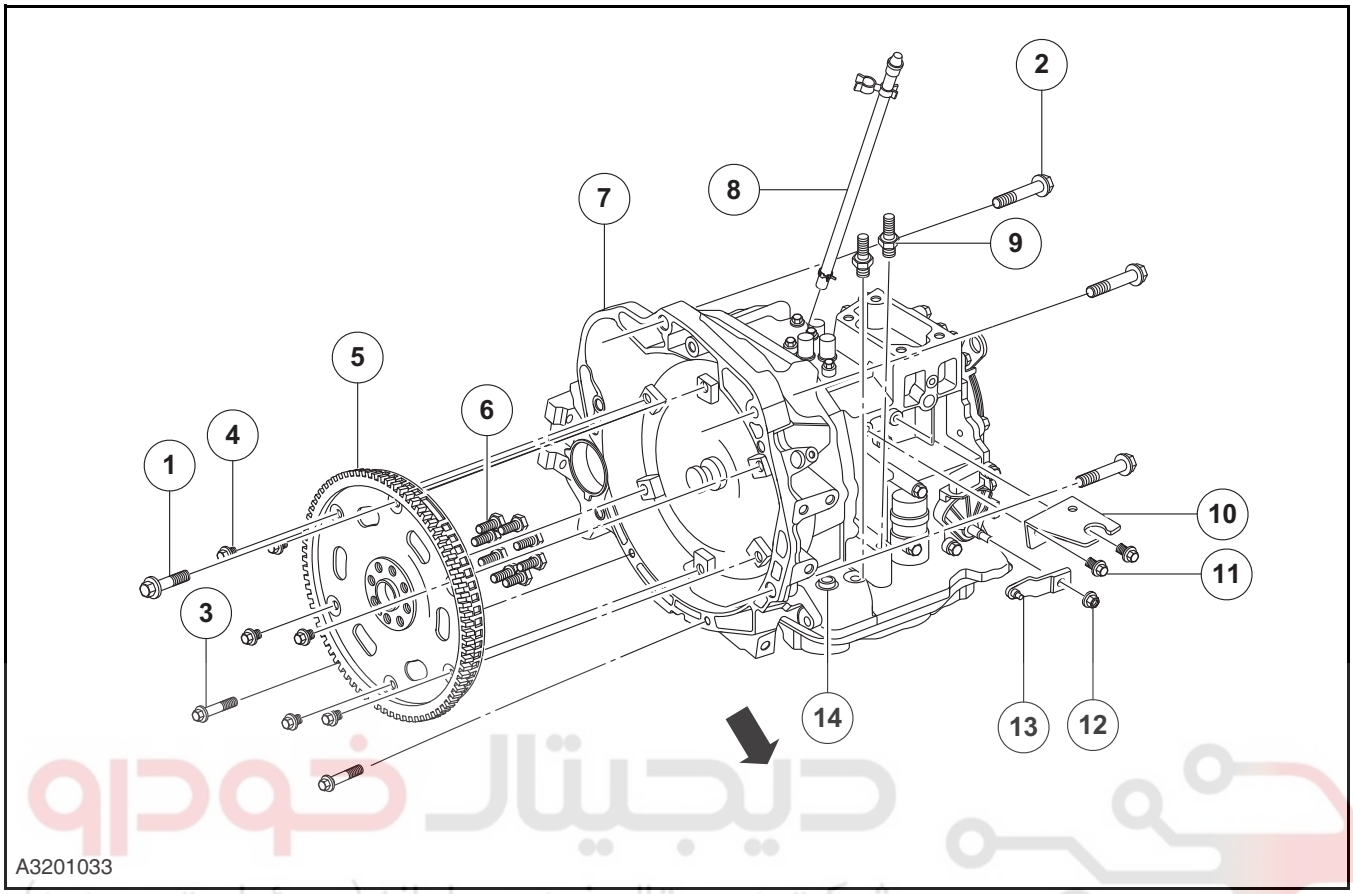

Item	Description	Torque Specifications		
		Nm	lb-ft	lb-in
1	Transmission mounting bolt	85	63	-
2	Transmission mounting bolt	85	63	-
3	Transmission mounting bolt	23	17	-
4	Drive plate mounting bolt	23	17	-
5	Drive plate assembly	-	-	-
6	Flywheel mounting bolt	60	44	-
7	Transmission assembly (4 AT)	-	-	-
8	Vent pipe assembly	-	-	-
9	Pipe fitting assembly	24	18	-
10	Gearshift cable support	-	-	-
11	Gearshift cable support mounting bolt	23	17	-
12	Gearshift arm mounting nut	23	17	-
13	Gearshift arm	-	-	-
14	Oil filling plug	35	26	-

Description and Operation

System General Information

CAUTION: In the process of diagnosis, a lack of basic knowledge would lead to wrong performance diagnosis or damage in components of power system. Don't try to diagnose any faults of power system without basic knowledge.

The automatic transmission TS-40 SN is a 4-speed manual & automatic transmission with lockup clutch. The automatic transmission mainly consists of the hydraulic torque converter with lockup clutch, planetary gear, hydraulic control system and electronic control system. The hydraulic control system is based on the hydraulic pressure generated by the oil pump, the automatic transmission control module sends signal to the solenoid valve and the hydraulic control system controls hydraulic pressure acting on hydraulic torque converter, clutches and brakes according to the vehicle driving condition. There are three clutches, two brakes and one one-way clutch controlling the planetary gear set. The control units are shown below.

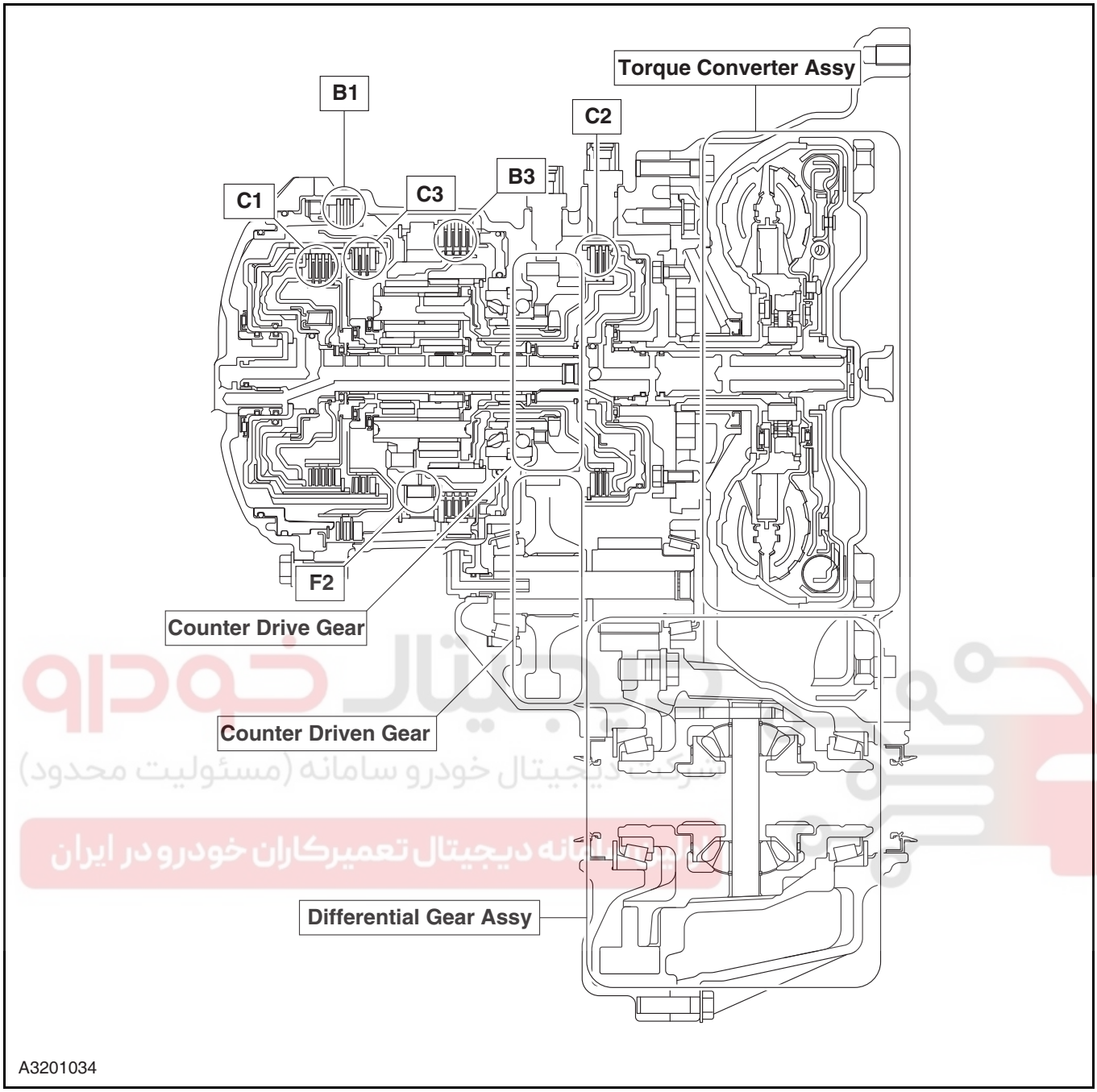

Clutches and Brake		Purpose
C1	Forward clutch	Connecting intermediate shaft to front sun gear
C2	Direct-drive clutch	Connecting intermediate shaft to front sun gear
C3	Reverse gear clutch	Connecting intermediate shaft to rear sun gear
B1	2nd coasting and 4th brake	lockup rear sun gear
B3	First gear and reverse brake	Brake planet carrier
F2	One-way clutch 2	Prevent planet carrier reversal

Execution Components Worksheet

Location		Solenoid Valve					Clutch			Brake		One-way Clutch
		SLC1	SLC2	SLB1	SLU	S1	C1	C2	C3	B1	B3	F2
		N/O	N/O	N/C	N/C	N/C						
"P"		○	□	×	×	○	×	×	×	×	×	×
R	V ≦ 7	○	□	×	×	○	×	×	○	×	○	×
	V > 7	○	○	×	○	○	×	×	○	×	×	×
"N"		○	□	×	×	○	×	×	×	×	×	×
D	1st	△ (□)	○	×	×	*1	○	×	×	×	×	○
	1st E/B	△ (□)	△	×	○	○	○	×	×	×	○	○
	2nd	△ (□)	○	△	⊙	*1	○	×	×	○	×	×
	2nd↔3rd	△ (□)	○→△	△→×	⊙	×	○	×→○	×	○→×	×	×
	3rd	△	△ (□)	×	⊙	×	○	○	×	×	×	×
	3rd↔4th	△→○	△ (□)	×→△	⊙	×	○→×	○	×	×→○	×	×
	4th	○	△ (□)	△	⊙	×	×	○	×	○	×	×

Remarks			
	○	ON (N/O: Close, N/C: Open)	Applied
	×	OFF (N/O: Open, N/C: Close)	Release
	⊙	ON: Lock-up ON	-
		OFF: Lock-up OFF	
	△	CONTROLED	Neutral control
	□	CONTROLED (Line pressure)	-

Lock-up operation exists: 2nd to 4th gears

*1: ○ : (V ≦ 14 km/h) / ×:(V > 14 km/h)

TCM Control Function

Automatic Shift Control

In each gear shift mode, TCM controls the gear shift solenoid (S1) to open or close according to the engine RPM signal, input shaft speed signal, vehicle speed signal, throttle position signal and brake pedal position signal, and also linearly operates the pressure control solenoids SLC1, SLC2 and SLB1 so as to control the hydraulic pressure in the hydraulic control system, realizing automatic shift of the transmission among gear positions.

Driver Self-adaptive Mode Control

During the vehicle driving, the automatic transmission is always in the self-adaptive mode. There is no switch for the driver to select a drive mode. Once the particular conditions occur, TCM will choose an appropriate gear shift mode for the driving status and automatically change the mode to improve the smooth gear shift.

Lockup Control and Slip Control

TCM linearly controls the solenoid to smoothly perform lockup control according to the input shaft speed signal, ECM signal (engine speed and throttle position) and vehicle speed signal. In addition, the lockup clutch slip ratio is monitored through monitoring of the input shaft speed sensor signal. Once the solenoid is closed, the lockup clutch is allowed to slip and the slip control expands the lockup range at low speed. This control reduces the engine speed, increase the drive efficiency of the transmission and improves the fuel economy. Meanwhile, with the slip of the lockup clutch, the engine speed fluctuation could be absorbed by torque converter.

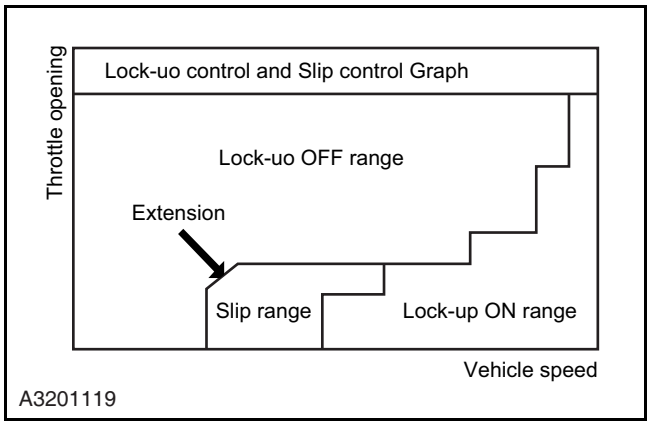

Reverse Gear Control

If the gearshift handle is moved from the N position to the R position while the vehicle is moving, the transmission will be reversed and wheels may be locked instantly, this is very dangerous. To avoid this, TCM will prohibit shifting the transmission into the reverse gear while the vehicle is moving.

Self-diagnostic Function

By monitoring communications of sensors and electronic elements (including with ECM), the self-diagnostic function of TCM will illuminate MIL on the instrument cluster to inform the driver of timely repair and store it in the TCM memory in the form of DTC if TCM detects a transmission related fault.

Fault Protect Function

If the automatic transmission system develops a fault, TCM will output a control signal to realize the fault protection function and this control allows the vehicle to move in the minimum distance. If a gearshift solenoid develops a fault, TCM will cancel the control signal to this solenoid to realize the fault protection function and at this time the gear is in the R or 3rd position.

TCM Initialization Learning

In case of automatic transmission or TCM replacement or TCM software overflow, the learning value must be initialized and the initialization learning be carried out.

1. Preheat

Make ATF temperature increase by keeping the engine working at idle speed or carrying out the urban road test, check ATF temperature and confirm the temperature is between 65 ℃ and 80 ℃ . Do not attempt to raise ATF temperature by stalling the engine. If the ATF temperature is not between 65℃ and 80 ℃, the initialization learning can not be performed.

2. Static gearshift self-learning

With the vehicle stopped, press the brake pedal and engage the gearshift handle into the N position and hold it in this position for 3 s. Then move the gearshift handle from the N position to the D position and hold it in the D position for 3s.

Repeat the procedure above 5 times. Again, move the gearshift handle from the N position to the R position and repeat this step 5 times.

3. Dynamic gearshift self-learning

Engage the gearshift handle into the D position and make the vehicle moving by keeping the throttle opening 25% ~ 35% until the automatic transmission is upshifted to the 4th gear and the vehicle speed reaches 80km/h or higher. Then release the accelerator pedal to allow the vehicle to coast and stop the vehicle within 60s. Repeat the procedure above 10 times.

4. Check the result of the initialization learning.

Check if the gearshift shock reduces as compared with that before the initialization learning.

Components Description

Transmission Control Module (TCM)

Transmission control module (TCM) mainly controls the relevant actions of the gear shift point and lockup solenoid. It is located at the front of the central console under the instrument panel at driver's side.

The transmission is controlled by the electronic gear shift system. The TCM processes the input signal. The TCM uses the received signals to control the transmission hydraulic system.

The electronic gear shift system consists of the components below.

Transmission Control Module (TCM)

Parking/Neutral Position Switch (NSW)

Gearshift Solenoid (S1)

Linear Pressure Control Solenoid (SLC1, SLC2, SLB1)

Lock-up Solenoid (SLU)

Input shaft Speed Sensor (NC2)

Output Shaft Speed Sensor (SP)

Transmission Oil Temperature Sensor (OT)

Parking/Neutral Position Switch (NSW)

The parking/neutral position switch (1) sends the information of the gear position, including that of Automatic Transmission (A/T) gearshift handle, to the starter and TCM.

- To prevent reckless driving, the Parking/Neutral position switch (NSW) could start an engine only in Park (P) gear and Neutral (N) gear.
- When reversing, the Parking/Neutral position switch (NSW) be switched to reversing lamps.
- This action regulates the Parking/Neutral position switch (NSW) to control the gear shifting.

The Parking/Neutral position switch (NSW) sends the information combining lines of both the starter and reverse directly to the vehicle without going through TCM.

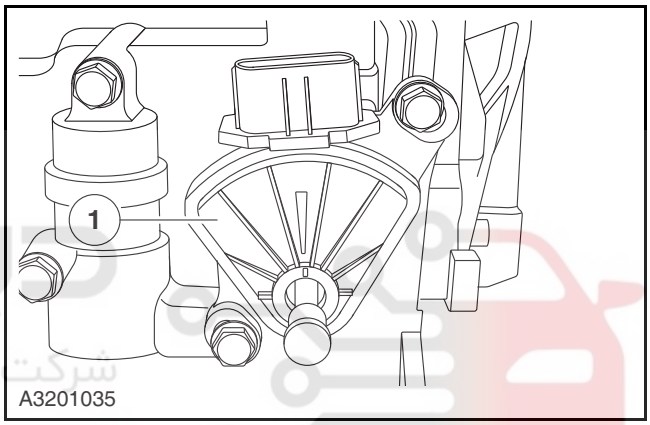

Gearshift Solenoid (S1)

The shift solenoid S1(1) is installed in the solenoid valve body directly. The solenoid carries out the "On/Off" operation through the control signal from TCM. Depending on S1 On or Off status, the oil gallery is switched to realize the fuel efficiency. In case of abnormality of solenoid S1 in the fail-safe mode, TCM will cut off the current to the solenoid.

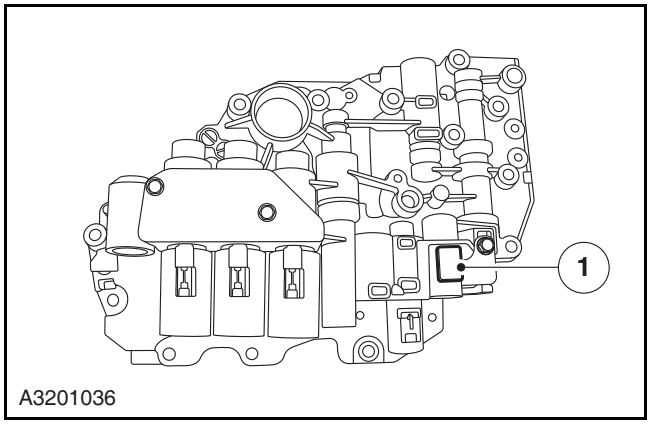

Lock-up Solenoid (SLU)

The lock-up solenoid is installed in the valve body. It receives the control signals from TCM. The lockup solenoid manipulates the lockup valve in the valve body and controls the hydraulic pressure to lockup clutch, realizing lockup and slip of the lockup clutch. In case of abnormality of solenoid SLU in the fail-safe mode, TCM will cut off the current to the solenoid.

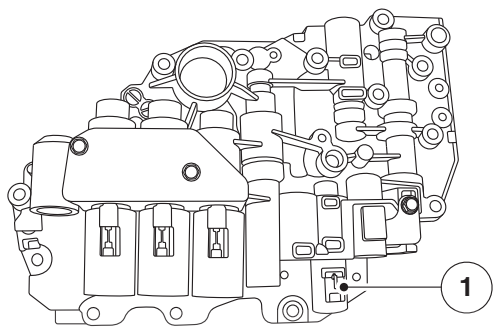

A3201037

Linear Pressure Control Solenoid (SLC1, SLC2, SLB1)

Linear pressure control solenoids (SLC1)(1), (SLC2)(2) and (SLB1)(3) are in the valve bodies and linearly controlled, their hydraulic pressures depend on the output signal of TCM. In this case, the hydraulic pressure to the clutches (C1, C2 and C3) and brakes (B1 and B3) are linearly controlled for smooth gear shift. Each solenoid performs the gear shift from 1st gear to 4th gear to realize the pipeline pressure control at the same time. In case of abnormality of a solenoid in the fail-safe mode, TCM will cut off the relevant linear pressure control solenoid.

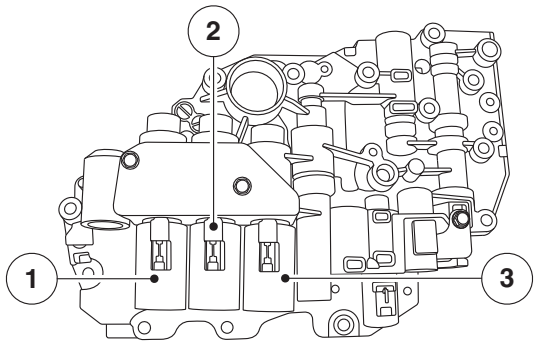

A3201038

Transmission Oil Temperature Sensor (OT)

The transmission oil temperature sensor (OT)(1) directly mounted on the transmission valve body converts the transmission fluid signal into electric signal and transmits it to TCM which controls the gear shift according to the temperature change.

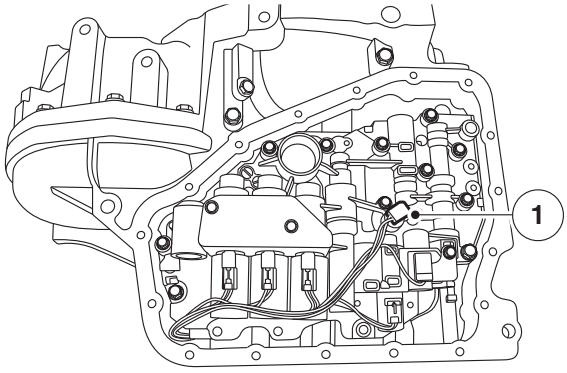

A3201039

Input Shaft Speed Sensor (NC2)

The input shaft speed sensor (NC2)(1) is located at the upper end of the automatic transmission. It detects the input speed of the automatic transmission according to the rotational speed of the intermediate shaft C2 hub(2) and then sends it as signal to TCM.

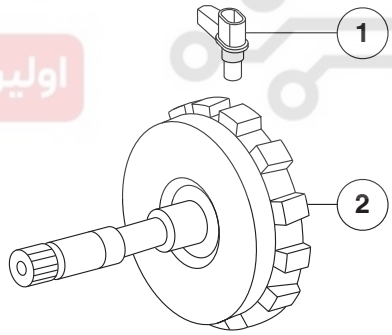

A3201040

Output Shaft Speed Sensor (SP)

The output shaft speed sensor (SP)(1) is located at the upper end of the automatic transmission. It detects the vehicle speed according to the speed of the counter shaft drive gear (2) and then sends it as signal to TCM.

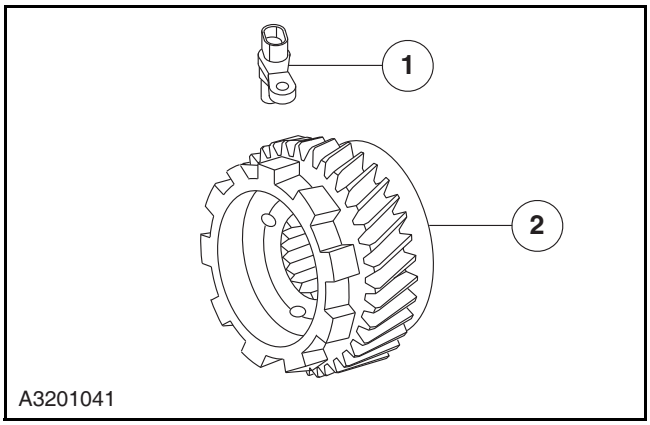

Location View

Control Unit Chart

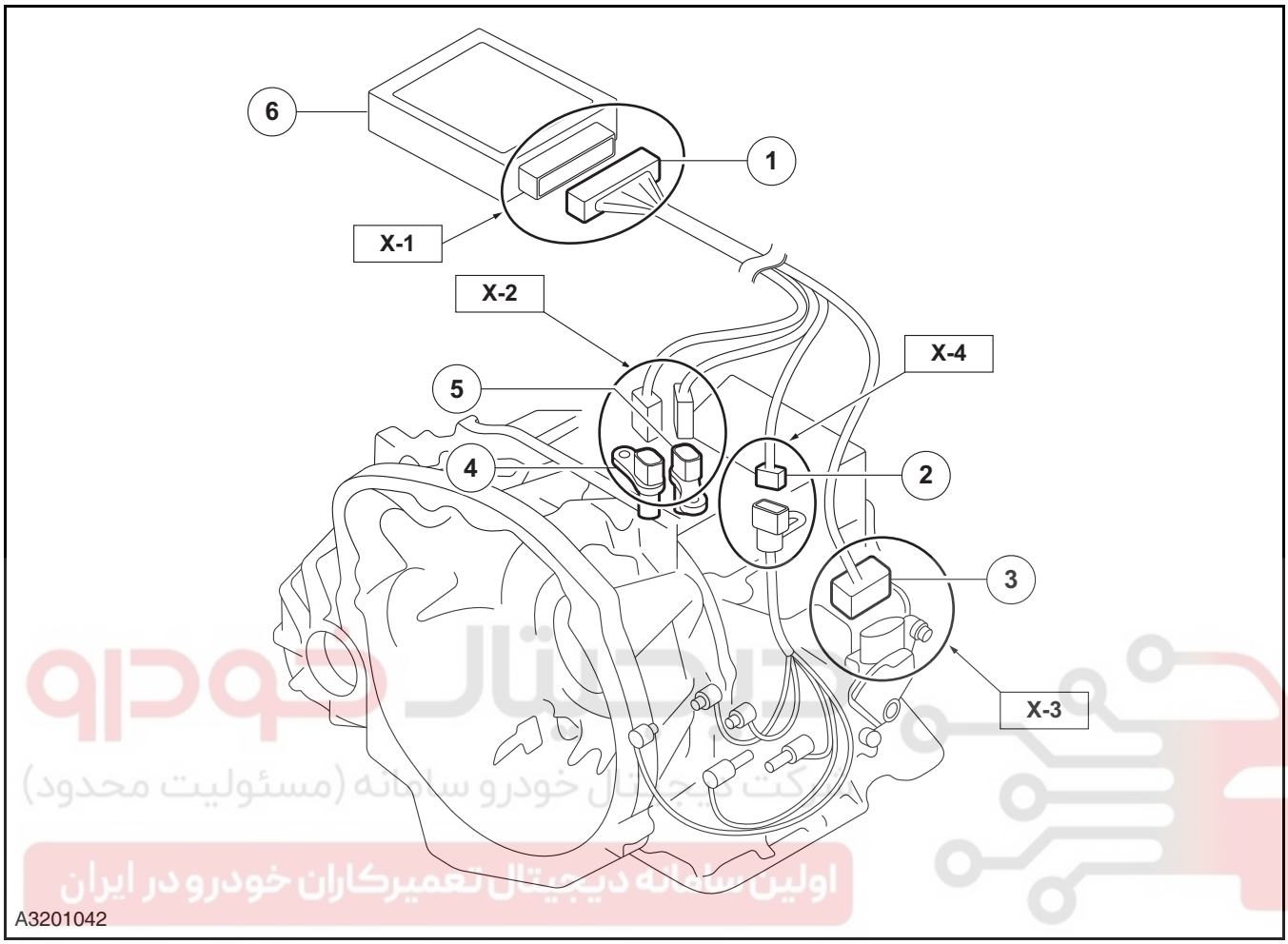

Item	Description	Item	Description
1	TCM wiring harness connector	4	Input shaft speed sensor (NC2)
2	Transmission wiring harness connector (including oil temperature sensor wiring harness)	5	Output shaft speed sensor (SP)
3	Parking/neutral position switch (NSW) wiring harness connector	6	Transmission control module (TCM)

Exploded View

Peripheral Exploded View

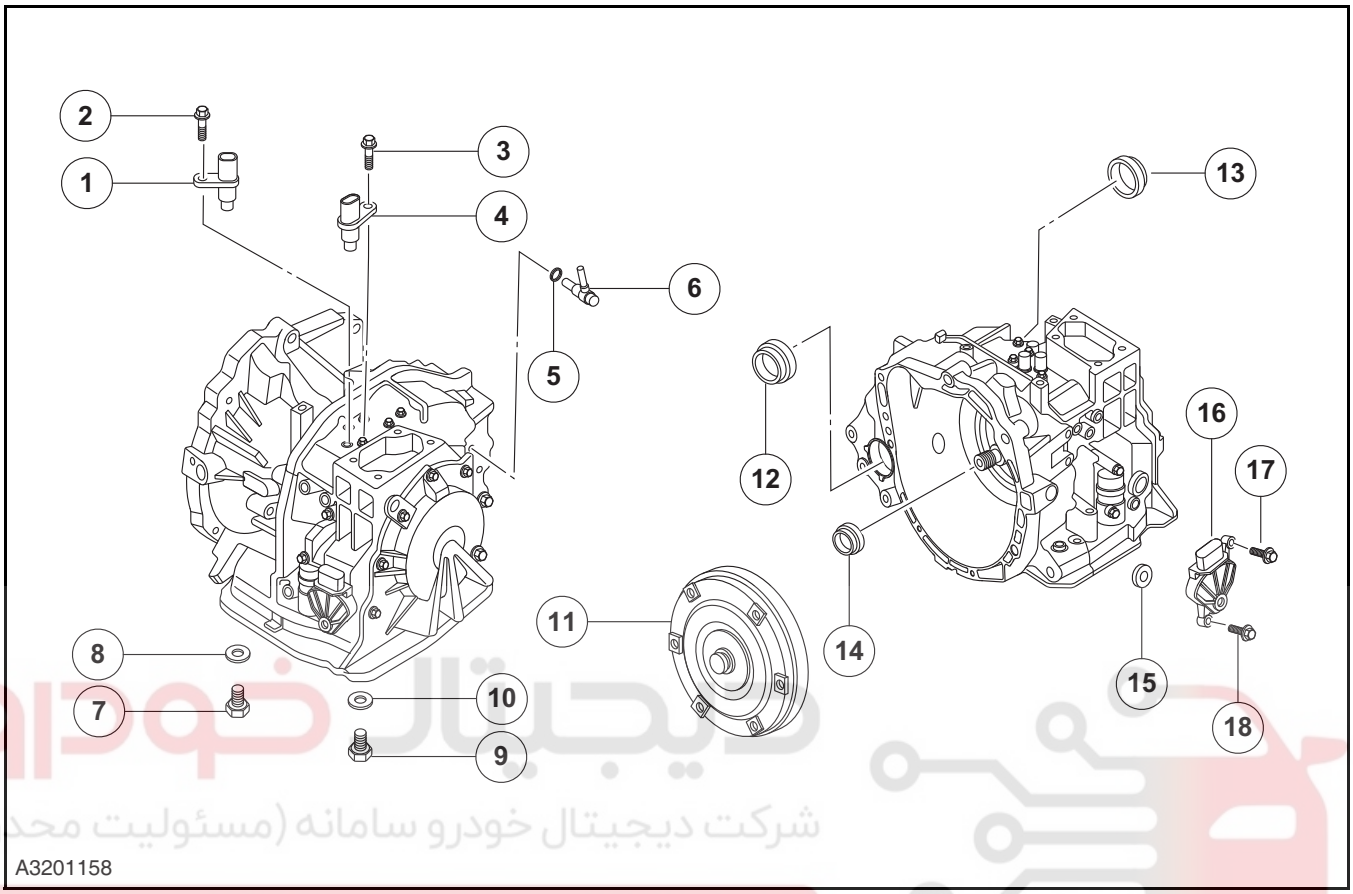

Item	Description	Item	Description
1	Output shaft speed sensor	10	Sealing gasket
2	Bolt & gasket	11	Hydraulic torque converter assembly
3	Input shaft speed sensor	12	Right differential oil seal
4	Bolt & gasket	13	Left differential oil seal
5	O-ring	14	Input shaft oil seal
6	Vent tube nipple	15	Sealing gasket
7	Overflow plug	16	Neutral position switch
8	Sealing gasket	17	Bolt & gasket
9	Oil drain plug	18	Bolt & gasket

General Procedures

Transmission Oil Level and Quality Inspection

CAUTION: When filling or refilling the oil, use the specified automatic transmission oil only.

CAUTION: Inspect the oil level when the auto transmission oil temperature is 35 ~ 45 ℃ .

CAUTION: When inspecting the oil level, the selection lever must be in Park (P).

1. Park the vehicle on a horizontal ground (lifter or trench) and secure the wheels.
2. Apply the parking brake and the wheel brake block to prevent slipping.
3. Confirm the gearshift handle remains in the P position.
4. Unscrew the transmission fluid filler plug.
5. Add 4 kg (approx. 4700ml) AW-1 transmission fluid via the filler hole.
6. Tighten the transmission filler plug (torque 30 ~ 40 Nm).
7. With A/C turned off, start the engine and keep it running at a speed below 2,000 RPM to heat the transmission fluid.
8. Shift the transmission gearshift handle in the order of P/R/N/D and hold the lever in each position for 3 s, then shift the lever in the order of D/N/R/P and finally set the lever in the P position. This process is intended to allow ATF to enter into each actuator thoroughly and make the fluid level inspection more accurate.
9. At idle speed, when the fluid temperature raises to 35 ℃ , keep the gearshift handle in the P position for 1 min.
10. When the temperature is stable between 35 ℃ and 45 ℃ , place a clean container under the transmission and unscrew the transmission overflow plug and carry out observations.
11. If the transmission fluid dripping changes from thread-like pattern to the drop pattern, then immediately tighten the transmission overflow plug (torque 23 ~ 25 Nm, the overflow plug gasket cannot be reused and should be replaced at the time of each level check).
12. Weigh the transmission fluid in the container. If the curve requirements below are met, then the transmission fluid level is normal, if not, then repeat the procedure below from step 4 until the requirements are met.

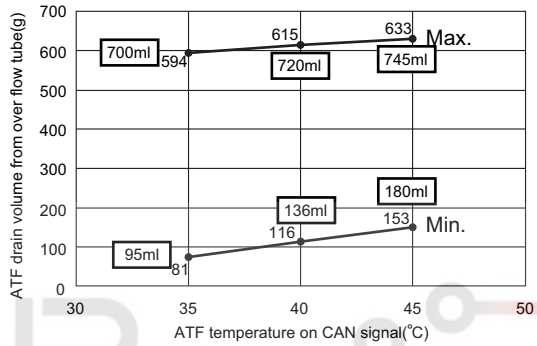

A3201044

13. If the level is too low, then add automatic transmission fluid via the filler hole and check if the automatic transmission leaks.
14. If the level is too high, then the automatic transmission fluid is overfilled. Discharge part of fluid through oil drain plug of oil pan. Check that automatic transmission fluid level returns to the normal level.
15. Drip the transmission oil on a piece of the clean white paper and watch its color.The natural color of the transmission oil is lighter dark red. If it's getting lighter or darker, replacement is needed.
16. Check the transmission fluid via its odor. A scorched smell indicates the slipping of clutch or brake. Service the transmission as well as replace the transmission fluid.

Preparation for Mechanical System Testing

1. Start the parking brake and use wheel brake blocks on both front and rear wheels.
2. Checking the engine coolant level.

Refer to: Coolant Level Inspection (3.1.4 Cooling System, General Procedures).

3. Inspect the engine oil level.

Refer to: Oil Level Inspection (3.1.3 Lubrication System, General Procedures).

4. Inspect the ATF level.

Refer to: Fluid Level and Quality Inspection (3.2.1 Automatic Transmission/Transaxle, General Procedures).

5. Inspect the idle speed.
6. Inspect the ignition timing.

Refer to: Timing Inspection (3.1.2 Mechanical System, General Procedures).

Transmission Oil Pressure Test

Special Tool

Automatic Transmission Oil Pressure Gauge

Be sure to carry out the fluid pressure test under the following conditions:

- The engine has been inspected and adjusted.
- A/C and headlight are turned off.

1. Prepare for the mechanical execution system test.

Refer to: Preparation for Mechanical System Test (3.2.1 Automatic Transmission, General Procedures).

WARNING: It may be dangerous to remove the plug when ATF is of high temperature. Hi-temp ATF would jet out from the outlet and thus lead to serious scalding. Please cool down the ATF before the removal of square head screw plug.

2. Connect the auto transmission oil pressure guage to the pressure inspection hole.
3. Warm up the engine until the temperature of ATF reaches 60 to 70 ℃ .
4. Shift the lever to D.
5. When the engine runs at idle speed in D, read the pipe pressure.
6. Read the pipe pressure when the engine runs at idle speed as it shows in step 4 and 5.
7. Depress the brake pedal hardly with your left foot.
8. Shift the lever to D.

CAUTION: The auto transmission may be damaged if the accelerator pedal is depressed down for more than 5 seconds when the brake pedal is depressed at the same time. Therefore, execute Step 9 and Step 10 in 5 seconds.

9. Depress the accelerator pedal gradually with your right foot.
10. When the engine speed does not increase any longer, read the pipe pressure quickly and release the accelerator pedal.
11. Shift the lever to N and make the engine run at idle speed for 1 minute or longer so as to cool ATF.
12. Read the pipe pressure when the engine runs on stalling speed at R gear as it shows from Step 7 to 11.
13. Remove the automatic transmission oil gauge.
14. Install the test nipple screw plug.

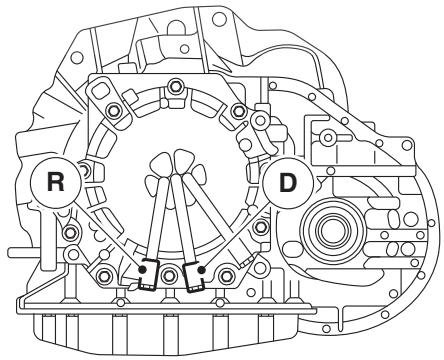

A3201045

Pipe Pressure (MPa)	D-gear	R-gear
Engine idle speed	SLC1: 0.625 ~ 0.775	SLC2: 0.449 ~ 0.539
Engine stalling	SLC1: 1.450 ~ 1.630	SLC2: 1.725 ~ 2.085

Pipe Pressure Test Assessment

Pipe Pressure Test Results	Possible Causes
Higher than standard pressure in both D and R	Pressure control solenoid (SLC1 or SL) malfunction
	Main pressure valve malfunction
Lower than standard pressure in both D and R	Pressure control solenoid (SLC1 or SL) malfunction
	Main pressure valve malfunction
	Oil pump fault
	Oil leakage in hydraulic system with transmission in P or R
Lower than standard pressure only in D	Hydraulic system malfunction with transmission in D
	C1 clutch fault
Lower than standard pressure only in R	Hydraulic system malfunction with transmission in R
	C3 clutch fault
	B2 brake fault
Higher than standard pressure only in D	Pressure control solenoid (SLC1 or SL) malfunction
Higher than standard pressure only in R	Pressure control solenoid (SLC1 or SL) malfunction
	Solenoid fault

Stalling Test

Be sure to carry out the stalling test under the following conditions:

- The engine has been inspected and adjusted.
- A/C and headlight are turned off.

1. Prepare for the mechanical execution system test.

   Refer to: Preparation for Mechanical System Test (3.2.1 Automatic Transmission, General Procedures).

2. Start the Engine.

CAUTION: Apply the parking brake and the wheel brake block to prevent slipping.

3. Depress the brake pedal hardly with your left foot.
4. Shift the lever to D.

CAUTION: The auto transmission may be damaged if the accelerator pedal is depressed down for more than 5 seconds when the brake pedal is depressed at the same time. Therefore, execute step 5 and step 6 in 5 seconds.

5. Depress the accelerator pedal lightly with your right foot.
6. When the engine speed does not increase any longer, read the speed quickly and release the accelerator pedal.
7. Shift the lever into N and make the engine run at idle speed for 1 minute or longer so as to cool ATF.
8. Execute the operation in R again as it shows from step 3 to step 7.
9. Turn off the engine.

Standard Value: 2,564 ± 2,864 rpm

Stall Testing Assessment

Stall Testing Result	Possible Causes
Lower than standard speed in both D and R	Engine power is insufficient
	T/C lockup clutch malfunction
Higher than standard speed only in D	Solenoid pressure low (pressure control solenoid (SLC1) malfunction, main pressure valve malfunction)
	Valve body fault (C1 solenoid hydraulic system)
	F2 one-way clutch slippage
	C1 Clutch slippage

Stall Testing Result	Possible Causes
Higher than standard speed only in R	Solenoid pressure low (pressure control solenoid (SLC2) malfunction, main pressure valve malfunction)
	Valve body fault (C2 solenoid hydraulic system)
	B3 Brake slippage
	C3 Clutch slippage
Higher than standard speed in both D and R	Solenoid pressure low (pressure control solenoid (SLC1 or SLC2) malfunction, main pressure valve malfunction)
	Oil pump fault
	Oil pump screen blocked

Road Test

CAUTION: The temperature of the engine oil is between 50 to 80 ℃ before the road test.

Be sure to carry out the road test under the following conditions:

- The engine has been inspected and adjusted.
- Transmission fluid is within the normal working range: 50 ~ 80 ℃ .
- A/C and headlight are turned off.
- Cruise switch is turned off.

1. Gear shift function (D):
   - During the normal driving, check if the transmission can be shifted from the 1st gear into the 2nd gear, from the 2nd gear into the 3rd and from the 3rd into the 4 gear.
2. Gear shift shock during the driving:
   - Check if the gear shift is smooth during the driving.
3. Kick-down function:
   - Perform the kick-down shift in each gear range.
   - Check if there is shock during the kick-down shift.
4. Engine brake:
   - With the transmission in the 1st gear in the manual mode, check for the engine brake.
5. Gear shift point when the accelerator pedal is pressed all the way down:
   - With the gearshift handle in D position, press the accelerator pedal all the way down and check if the transmission can be upshifted from the 1st gear to the 2nd gear to meet the specific gearshift point.
6. Manual gear shift control:
   - Check if any position can be shifted into in manual mode.
7. Control lock function:
   - With lockup function active on the flat surface, check that engine speed will change significantly when the accelerator pedal is gently pressed.
8. Working condition while in P position:
   - Park at a slope (5% or 3° or steeper), move into the P position and then release the brake, check if the vehicle can move.
9. Oil leakage:
   - At the end of the road test, check each part for oil leakage.

Time Lag Test

Be sure to carry out the time lag test under the following conditions:

- The engine has been inspected and adjusted.
- A/C and headlight are turned off.
- Cruise switch is turned off.

1. Prepare for the mechanical execution system test.

   Refer to: Preparation for Mechanical System Test (3.2.1 Automatic Transmission, General Procedures).
2. Start the Engine.

3. Warm up the engine until the temperature of ATF reaches 60 to 70 ℃ .
4. Apply the brake and allow the engine to run at idle. Move the gearshift handle from the N position to the D position or from the N position to the R position and use a timer to record the time required from the commencement of the gear shift to the vibration feel.

   Formula: Average Time Lag = (Time 1 + Time 2 + Time 3)/3
5. Execute the following shifting test as it shows in step 5.

   • N → R

Gear Shifting	Time
From N position to R position	1.5 s or shorter
From N position to D position	1.5 s or shorter

Time Lag Test Assessment

Time Lag Test Result	Possible Causes
The time of shifting from N to D is longer than standard time.	Valve body fault (C1 or C2 hydraulic system)
	C1 Clutch slippage
	F2 one-way clutch fault
	Oil pump fault
The time of shifting from N to R is longer than standard time.	Valve body fault (C1 or C2 or S1 solenoid hydraulic system)
	C3 Clutch slippage
	B3 brake fault
	Oil pump fault
	Oil filter blocked

Parking/Neutral Position Switch Inspection

1. Switch off the Parking/Neutral switch (NSW).

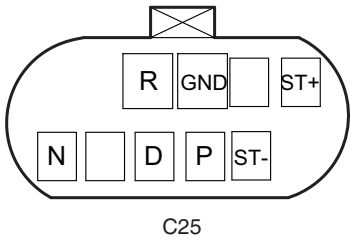

A3201046

2. Use the multimeter to inspect if every gear range could conduct electricity according to the polarity and indicator line table.

Terminal / Position	ST Circuit		Circuit				
	ST+	ST-	GND	P	R	N	D
P Position	○	○	○	○			
R Position			○		○		
N Position	○	○	○			○	
D Position			○				○

A3201047

3. If a wrong gear range is displayed during the test, replace the parking/neutral switch.

Manual Mode Switch Inspection

1. Set the gearshift handle in the manual mode position.
2. Disconnect the gearshift handle wiring harness connector.

Terminal / Position	Circuit			
	2	8	9	10
MS-	○	○		
MS+	○		○	
MS	○			○

A3201057

3. Operate the manual mode gear of the gearshift handle.

4. Carry out tests as per the table below using a multimeter.

Standard

Terminal	Terminal Definition
8 [MS-]	Manual downshift switch
9 [MS+]	Manual upshift switch
10 [MS]	Manual shift mode switch
2 [GND]	Gearshift handle grounding

Accelerator Pedal Output Signal Inspection

Refer to: DTC Diagnostic Procedure Index (3.1.13 Electronic Control System - ME7, DTC Diagnosis and Testing).

Oil Temperature Sensor Inspection

1. Remove the transmission oil temperature sensor.
2. At certain transmission oil temperature, measure the resistance value between Terminals 1 and 7 of the transmission oil temperature sensor.

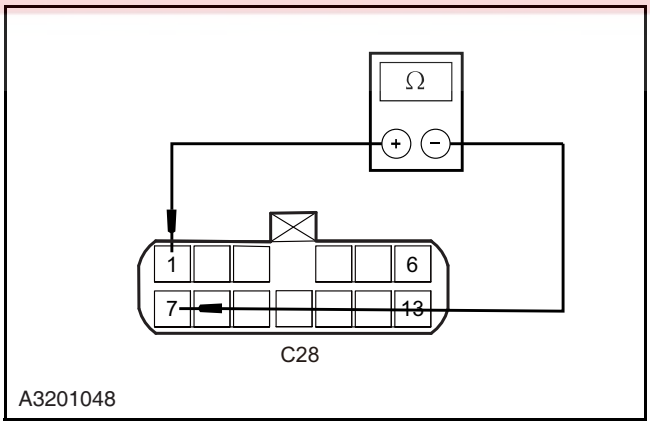

3. If the value measured at certain temperature does not fall within the standard resistance value range, then replace the transmission oil temperature sensor. Refer to the table below for standard resistances in different temperature.

CAUTION: Do not damage the sensor and its terminals.

Description	Temperature	Resistance
Oil temperature sensor	-40 ℃	161 kΩ (Max)
	-30 ℃	36.3 ~ 52.1 kΩ
	-10 ℃	5.626 ~ 7.303 kΩ
	25 ℃	3.50 kΩ
	110 ℃	0.224 ~ 0.271 kΩ
	145 ℃	0.102 ~ 0.121 kΩ
	150 ℃	0.087 kΩ (Min)

4. Test if terminals 1 and 7 of the transmission oil temperature sensor are shorted to ground.

Standard Resistance Value: 10 MΩ or more

CAUTION: Do not damage the terminals of the sensor.

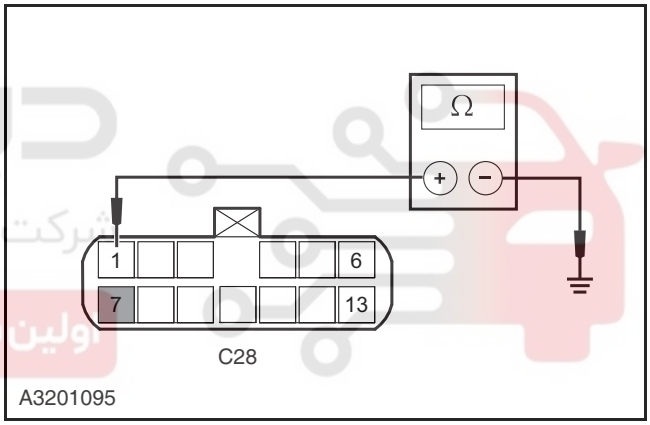

5. If the measurements are accurate, then repair the failed circuit of the transmission oil temperature sensor.

Input Shaft Speed Sensor (NC2) Inspection

1. The input shaft speed sensor is an electromagnetic induction speed sensor. Its inspection can be done by measuring continuity between its terminals and can determine on the health of the sensor.

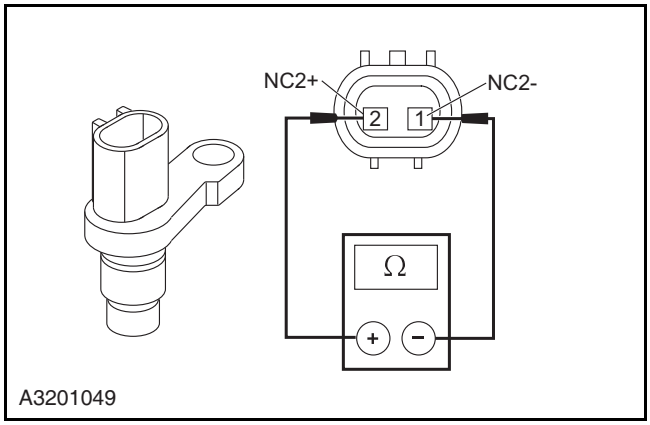

Standard Value: continuity between two terminals

CAUTION: Do not damage the sensor and its terminals.

CAUTION: In the measurement of the resistance at both ends of the sensor, the resistance value measured may be 100 kΩ or greater, but it can not serve as the basis for fault determination.

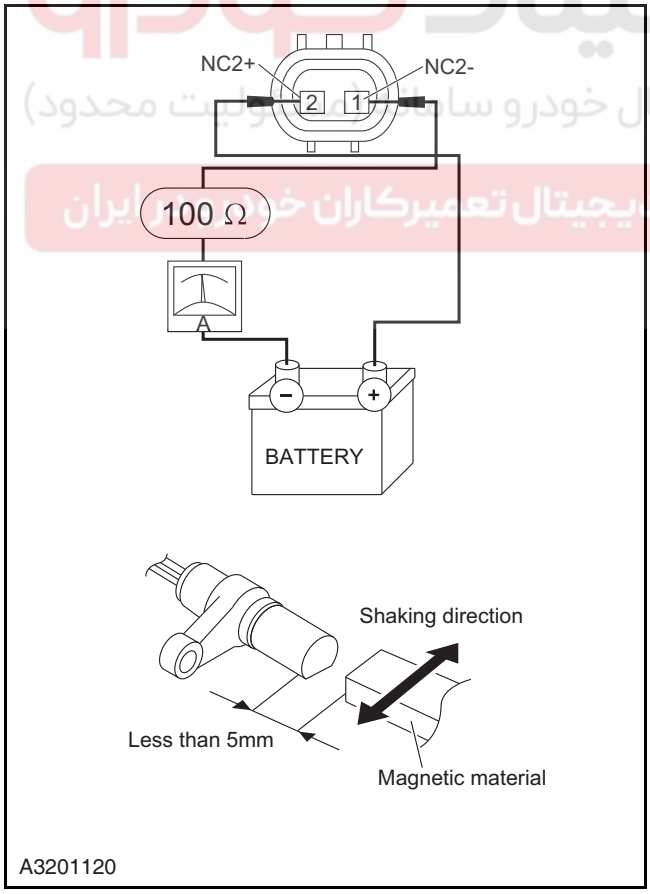

2. Remove the input shaft speed sensor.

3. As shown above, energize the sensor and connect a resistor of 100 Ω and an ammeter in series.

CAUTION: Do not damage the sensor and its terminals.

4. Move left and right a magnet below with a distance of 5 mm from the speed sensor, and check the ammeter readings. Refer to the table below for standard current values.

Signal	Current
High	12.0 ~ 16.0 mA
Low	4.0 ~ 8.0 mA

5. If the current values measured in two attempts are not between the min. and max. current values, replace the sensor measured.

Output Shaft Speed Sensor(SP) Inspection

1. The output shaft speed sensor is an electromagnetic induction speed sensor. Its inspection can be done by measuring continuity between its terminals and can determine on the health of the sensor.

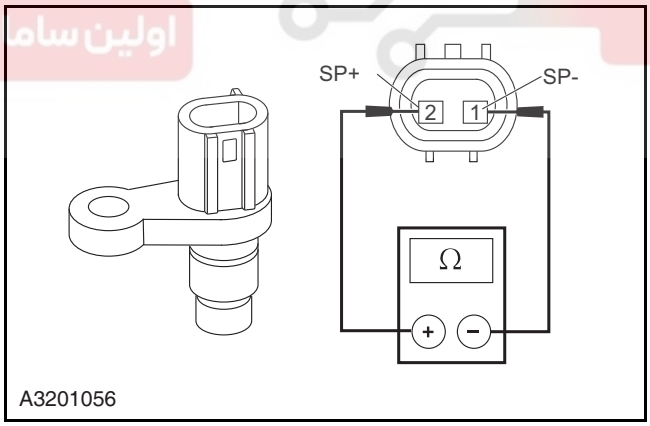

Standard Value: continuity between two terminals

CAUTION: Do not damage the sensor and its terminals.

CAUTION: In the measurement of the resistance at both ends of the sensor, the resistance value measured may be 100 kΩ or greater, but it can not serve as the basis for fault determination.

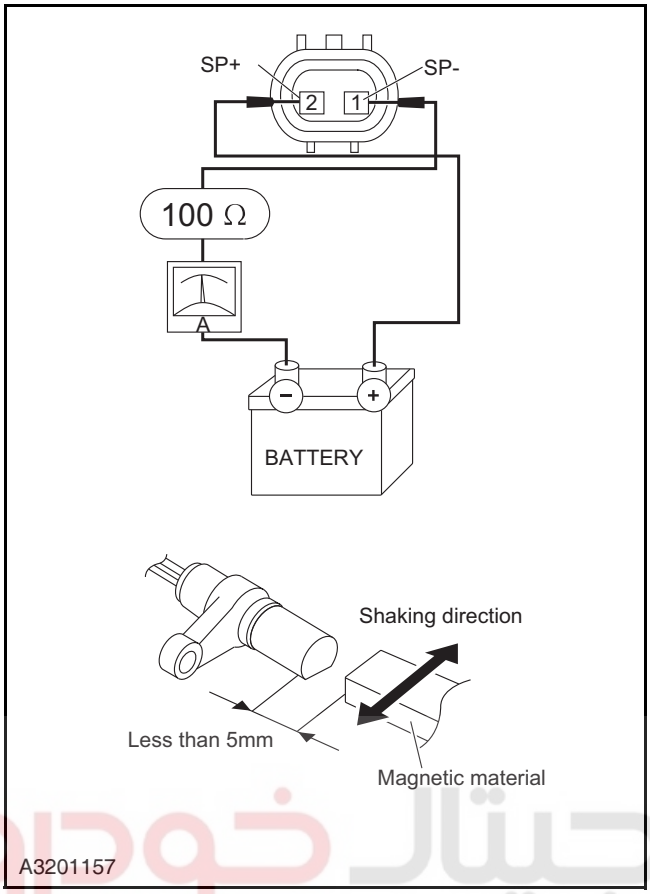

2. Remove the output shaft speed sensor.
3. As shown above, energize the sensor and connect a resistor of 100 Ω and an ammeter in series.

CAUTION: Do not damage the sensor and its terminals.

4. Move left and right a magnet below with a distance of 5mm from the speed sensor, and check the ammeter readings. Refer to the table below for standard current values.

Signal	Current
High	12.0 ~ 16.0 mA
Low	4.0 ~ 8.0 mA

5. If the current values measured in two attempts are not between the min. and max. current values, replace the sensor measured.

Shift Solenoid (S1) Inspection

1. Remove the oil pan.
2. Remove the gearshift solenoid.
3. Use a multimeter to measure the resistance between the solenoid terminal and the grounding terminal.

CAUTION: When measuring the solenoid resistance in high temperature, the value would become infinite.

CAUTION: Do not damage the shift solenoid and its terminals.

4. If the value is not between the maximum and minimum resistance curve, measure the solenoid resistance in 20℃. Refer to the table below for the resistance in different temperatures.

Standard Resistance Value: 11 ~ 15 Ω (20 ℃)

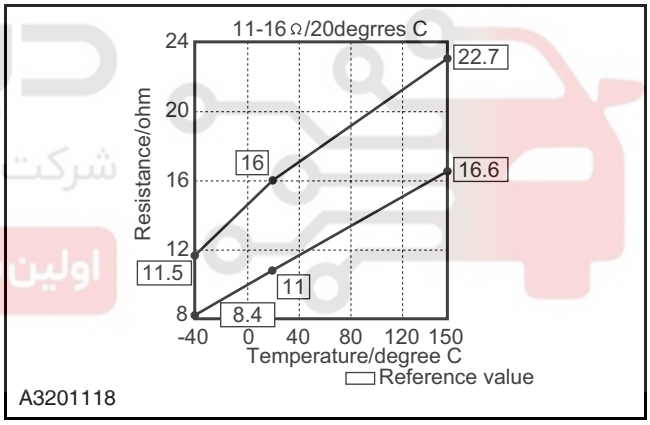

5. Connect the battery's positive with the solenoid terminal and the negative with the solenoid ground, check if the solenoid works. Connect the battery's positive with the solenoid terminal and the negative with the solenoid ground. The shift solenoid (S1) is a 3-way valve. Check if the air flow direction is correct, refer to the figure below.

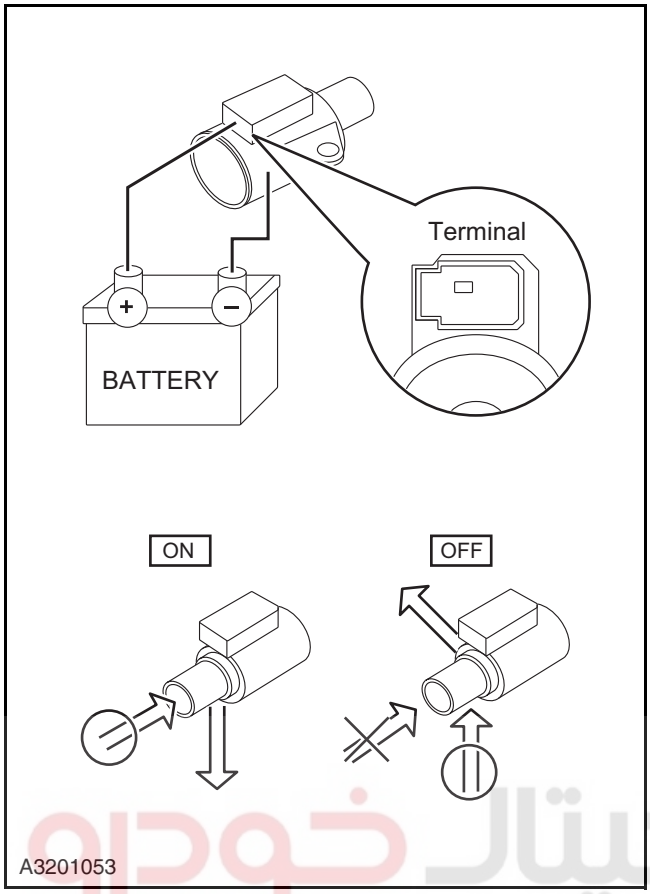

Linear Pressure Control Solenoid (SLC1, SLC2 and SLB1) Inspection

1. Remove the oil pan.
2. Remove the valve body.

CAUTION: Do not remove a solenoid from the body.

CAUTION: Do not damage a solenoid.

3. Measure the resistance between terminals of the pressure control solenoid with a multimeter.

CAUTION: Do not damage a solenoid and its terminals.

4. If the value is not between the maximum and minimum resistance curve, measure the solenoid resistance in 20 ℃ .

Standard Resistance Value: 5.0 ~ 5.6 Ω (20 ℃)

CAUTION: When measuring the sensor resistance in high temperature, the value would become infinite.

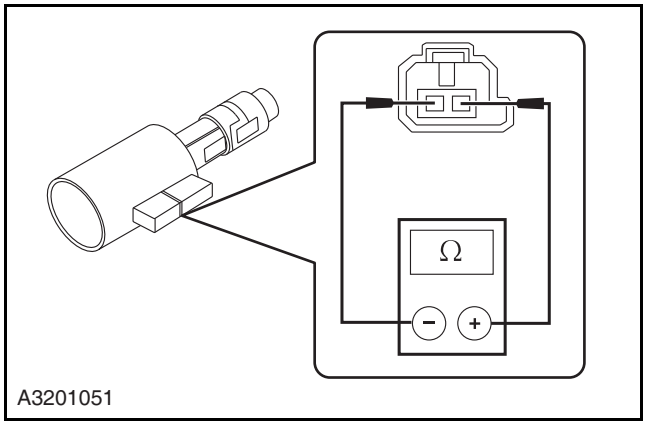

5. Replace the measured solenoid if both of the values are not between the maximum and minimum resistance curve. Refer to the table below for resistances in different temperature.

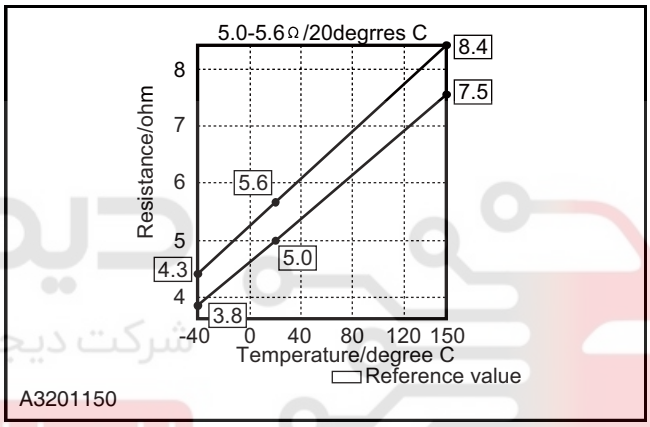

6. Do connections as shown and test if every solenoid works.
(Bulb 12 V-21 W)

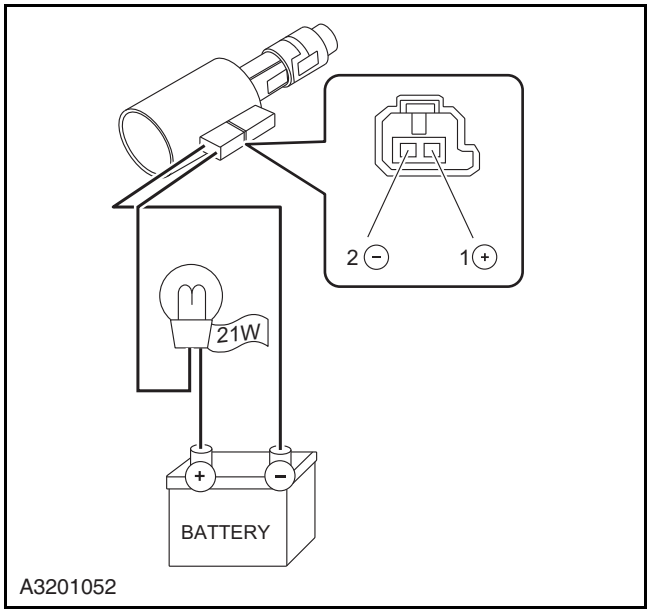

Lockup Solenoid (SLU) Inspection

1. Remove the oil pan.
2. Remove the valve body.

CAUTION: Do not remove the solenoid from the body.

CAUTION: Do not damage a solenoid.

3. Measure the resistance between terminals of the pressure control solenoid with a multimeter.

CAUTION: Do not damage the shift solenoid and its terminals.

4. If the value is not between the maximum and minimum resistance curve, measure the solenoid resistance in 20 ℃ .

Standard Resistance Value: 5.0 ~ 5.6 Ω (20 ℃)

CAUTION: When measuring the sensor resistance in high temperature, the value would become infinite.

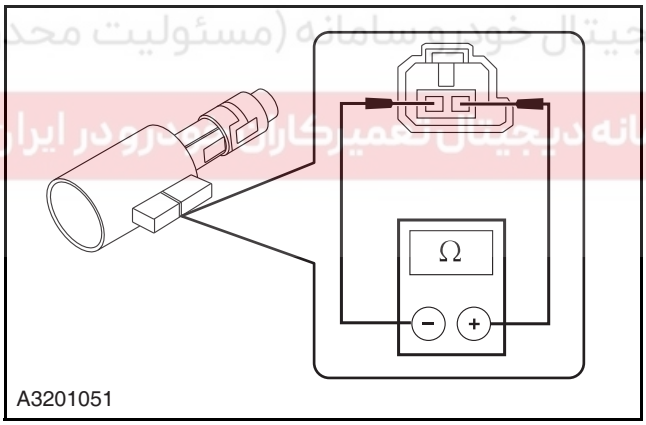

5. Replace the measured solenoid if both of the values are not between the maximum and minimum resistance curve. Refer to the table below for resistances in different temperatures.

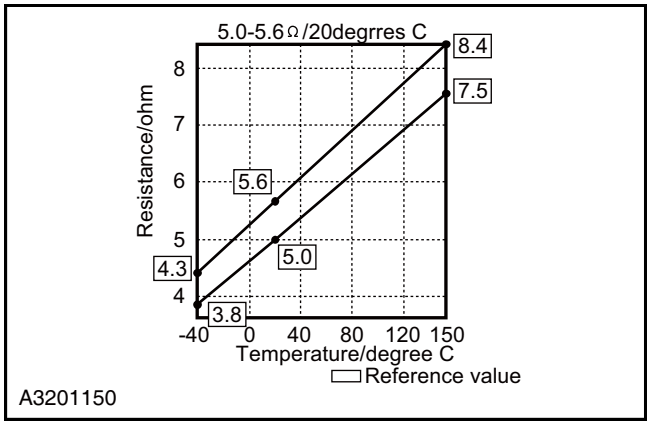

6. Do connections as shown and test if every solenoid works.
(Bulb 12 V-21 W)

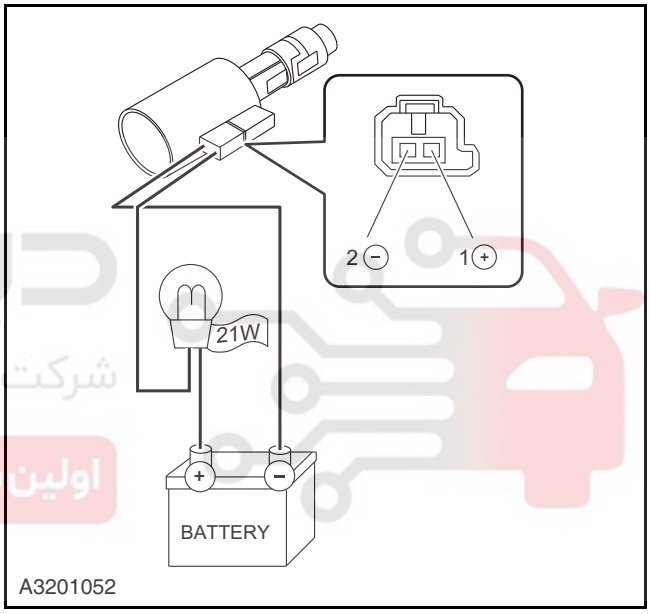

Flywheel Face Runout Check

1. Check if the drive plate runout falls within the reference value range.

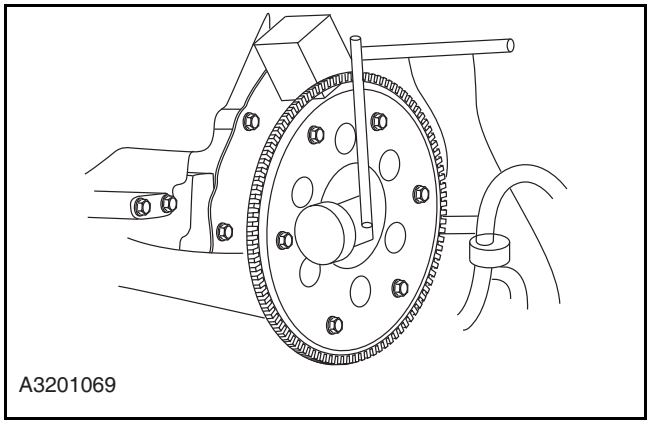

Standard Value: smaller or equal to 0.2 mm

CAUTION: If not within the range, replace the drive plate.

CAUTION: If an "abnormal wear" or "spot erosion" is detected on T/C or oil pump, replace the A/T assembly.

Cooler Tube Bending and Clogging Check

1. Check the chamfer R section of the cooler tube, distorted part and small-section area of the tube for abnormal bend.

CAUTION: If there is any problem, replace the failed parts.

2. Blow 2 kg/cm^2 compressed air into the tube from its inlet and check if the tube is clogged by identifying smoothness of the air flow.

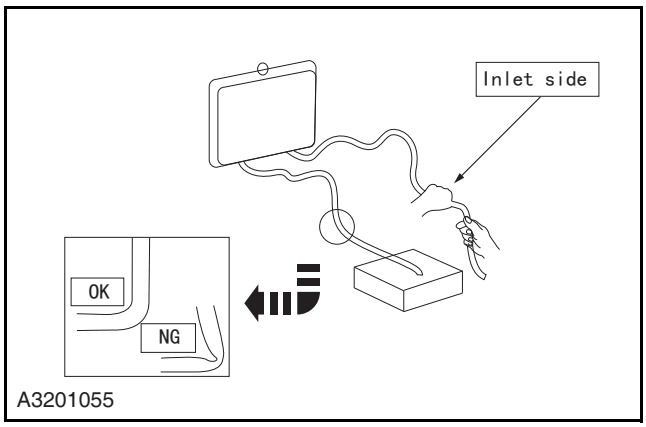

CAUTION: Cooler tube bending and clogging

3. A bent or clogged cooler tube will result in reduced flow of transmission fluid through the cooler, giving rise to the increased fluid temperature and fluid overflow through the vent pipe, the lockup clutch of T/C can not respond due to lack of pressure and the engine at idle will shut down due to continued engagement of lockup clutch. Remove the impurities in the tube and clean the inside or replace the tube.

Symptom Diagnosis and Testing

General Equipment

Digital Multimeter
Changan Auto Special Diagnostic Tool

Inspection and Verification

1. Verify the customer concern.
2. Visually inspect for obvious signs of mechanical damage or electric damage.

Visual inspection chart

Mechanical	Electric
• Leak • Gear shifting cables	• Fuse • Circuit • Electrical wiring harness connector

3. If an obvious cause for an observed or reported concern is found, correct the cause before proceeding to the next step.
4. If the cause is not evident, verify the symptom and refer to the Symptom Chart.

Symptom Chart

If there is a symptom but no DTC is stored in control module and can not confirm symptom reasons in basic inspect, it is necessary to diagnosis and eliminate the symptoms in the following chart.

Symptom	Possible Sources	Action
Diagnosis process of the malfunction indicator light malfunction	• Instrument • Circuit • Bulb • TCM	**Refer to: Improper MIL Operation Diagnosis (3.2.1 Automatic Transmission, Symptom Diagnosis and Testing).**
The abnormal gearshift (up or down shifting)	• Emergency mode • Throttle Position Sensor • Input shaft speed sensor • Output Shaft Speed Sensor • TCM • Neutral position switch	**Refer to: Abnormal Gear Shift Diagnosis (Upshift or Downshift) (3.2.1 Automatic Transmission, Symptom Diagnosis and Testing).**
Enter transmission malfunction safe mode	• S1 shift solenoid valve • Solenoids SLC1, SLC2, SLB1 • ECM • TCM • Circuit	• Replace the solenoid. • Repair the TCM malfunction. • Repair the ECM malfunction. • Repair the circuit.
The engine speed does not change when depressing the accelerator pedal	• Air Intake system • Inlet air pressure sensor • Throttle body • Fuel injector • Spark plug • Ignition timing • Fuel • Exhaust block • Control module circuit	**Refer to: Symptom Chart (3.1.13 Electronic Control System - ME7, Symptom Diagnosis and Testing).**

Symptom	Possible Sources	Action
Stationary, abnormal shift shock during driving	• Engine output power • Pressure control solenoid • Output shaft speed sensor • Input shaft speed sensor • Neutral position switch • Automatic transmission	Refer to: Stationary, Abnormal Gear Shift Shock During Driving Diagnosis (3.2.1 Automatic Transmission, Symptom Diagnosis and Testing).
Snow mode can not be enabled.	• Manual mode switch • Circuit • TCM	Refer to: Failure to Enable Manual Mode Diagnosis (3.2.1 Automatic Transmission, Symptom Diagnosis and Testing).

Symptom	Possible Sources	Action
Fluid leakage	• Automatic transaxle housing or case leakage	• Check bolt torque. If a bolt is loose, replace fasteners and tighten to torque specification. If the torque is correct, inspect the case and sealing. Replace if necessary.
	• O-ring leakage-sensors, transmission cable	• Inspect if the O-ring of the connectors are damaged or lost, then replace them. Replace if necessary.
	• Leak in the oil pan washer area	• Check if the torque of oil pan bolt is proper. Check if the gasket is correctly positioned or curls up. Replace if necessary.
	• Gearshift lever area leakage	• Check if the gearshift handle seals or the gearshift handle is damaged. Repair as necessary.
	• Output flange area leakage	• Check if the oil slinger seal and output shaft seal are damaged. Visually check output the flange surface for damage. Repair as necessary.
	• Transmission vent area leakage	• Check if the fluid is overfilled. Adjust as necessary. If the level is within the specified range, then test on board. Monitor the transmission temperature. If the working temperature is found too high, then the transmission fluid could be contaminated or the cooling system fails, replace the fluid as per the procedures in the service manual.
	• Transmission filler area leakage	• Check if the filling port is properly installed. Check the oil-ring seal between housing and filling port for leakage, and repair as necessary.

Symptom	Possible Sources	Action
Transmission noise	• The bolts of torque converter touches the dust boot	• Replace the transmission.
	• Drive disk damage or crack	
	• Drive shaft or rear axle noise	
	• Transmission output bearing noise	
	• Oil pump	
	• Oil level low	• Inspect and adjust the oil level.
	• In emergency mode	• Repair according to the DTC. **Refer to: DTC Diagnostic Procedure Index (3.2.1 Automatic Transmission, DTC Diagnosis and Testing).**

Malfunction Indicator Fault Diagnosis

Test Conditions	Details/Results/Actions
1. Inspect the instrument status and other warning lamps	
	A. Turn the ignition switch to position "ON". B. Inspect the state of all the instrument warning lamps. Are any indicators on except for MIL? **Y** Go to step 2. **N** Go to step 4.
2. Inspect the power supply circuit of the instrument cluster	
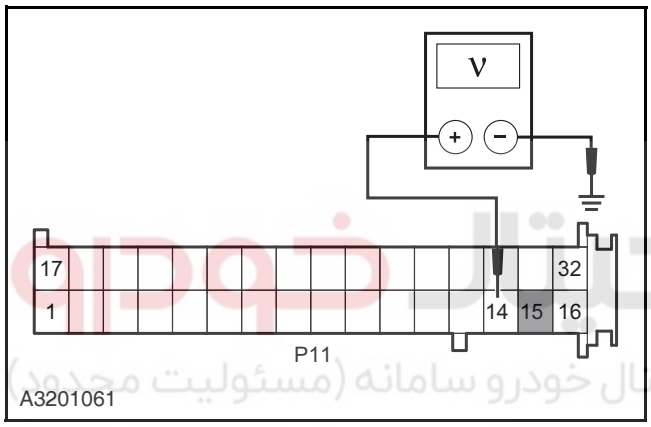	A. Turn the ignition switch to position "LOCK". B. Disconnect the instrument cluster wiring harness connector P11. C. Turn the ignition switch to position "ON". D. Measure the voltage between the terminal 14 and 15 of the instrument cluster wiring harness connector P11 and the reliable grounding. **Standard Voltage Value: 11~14V** Is the voltage normal? **Y** Go to step 3. **N** Inspect and repair the open circuit fault of the terminal 14 and 15 of the instrument cluster wiring harness connector P11 to the terminal 51 of the fuse IF25 in the I/P fuse and relay box P01 and to the terminal 13 of fuse IF06 respectively.
3. Inspect the instrument cluster ground circuit	
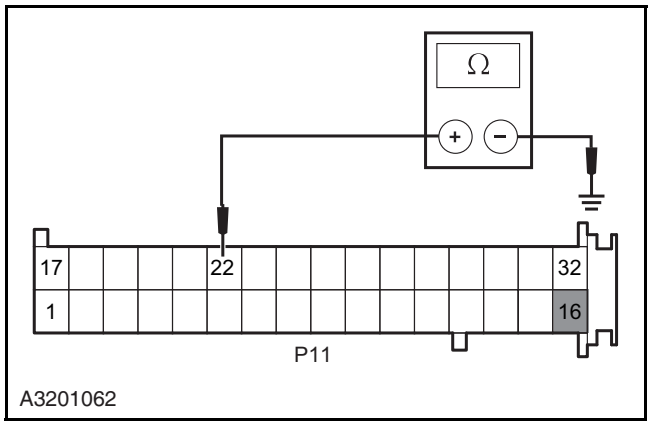	A. Turn the ignition switch to position "LOCK". B. Disconnect the instrument cluster wiring harness connector P11. C. Measure the resistance between the terminal 16 and 22 of the instrument cluster wiring harness connector P11 and the reliable grounding. **Standard Resistance Value: less than 5 Ω** Is the resistance value normal? **Y** Go to step 4. **N** Inspect and repair the open circuit fault between the terminal 16 and 22 of the instrument cluster wiring harness connector P11 and the grounding point G102 and G104.

Test Conditions	Details/Results/Actions
4. Implement the MIL drive test	
	A. Connect the fault diagnostic tool. B. Turn the ignition switch to position "ON". C. Select "MIL" "ON" from the "Active Test" menu in the diagnostic tool. MIL can turn on as normal. Is the fault indicator lamp drive test normal? **Y** Go to step 5. **N** Replace the instrument cluster. **Refer to: Instrument (4.3.2 Instrument, Removal and Installation).**
5. Inspect and repair the CAN bus	
	A. Inspect and repair the CAN bus. **Refer to: Diagnostic Tool Can Not Communicate via CAN With ECM (4.3.15 On-board Network, Symptom Chart).** Is the CAN bus circuit normal? **Y** Go to step 6. **N** Repair the faulty circuit.
6. Inspect the ECM power supply circuit	
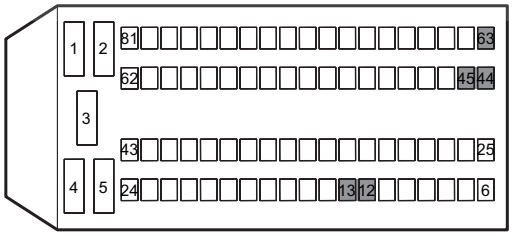 E01 A3201125	A. Turn the ignition switch to position "LOCK". B. Measure from the back of ECM wiring harness connector E01. C. Turn the ignition switch to position "ON" and use a multimeter to measure the voltage between the terminals 12, 13, 44, 45 and 63 of the ECM wiring harness connector E01 and the reliable grounding. **Standard Voltage Value: 11 ~ 14 V** Is the voltage normal? **Y** Go to step 7. **N** Inspect the ECM power supply circuit.

Test Conditions	Details/Results/Actions
7. Inspect the ECM ground circuit	
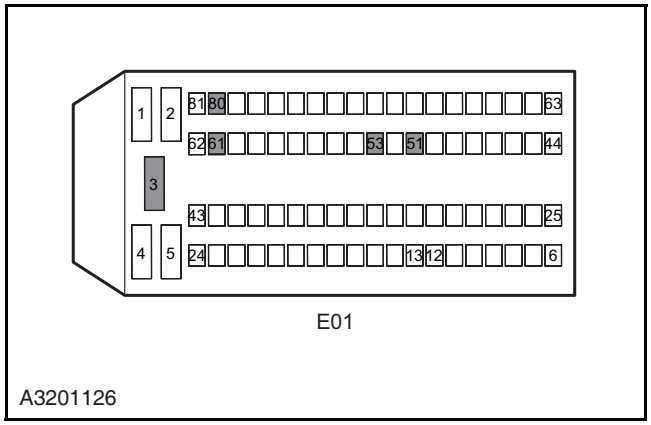	A. Turn the ignition switch to position "LOCK". B. Measure from the back of ECM wiring harness connector E01. C. Measure with a multimeter the resistance between the ECM wiring harness connector E01 terminal 3, 51, 53, 61 and 80 and the reliable grounding. **Standard Resistance Value: less than 5 Ω** Is the resistance value normal? **Y** Replace the engine control module. **Refer to: Engine Control Module (3.1.13 Electronic Control System - ME7, Removal and Installation).** **N** Inspect and repair the ECM ground circuit.

Abnormal Shift Diagnosis (Up or Down Shifting)

Test Conditions	Details/Results/Actions
1. Inspect the DTC	
	A. Connect the diagnostic tool. B. Inspect the AT system with the diagnostic tool. Does the automatic transmission system have diagnosis DTC? **Y** Carry out the DTC diagnosis. **Refer to: DTC Diagnostic Procedure Index (3.2.1 Automatic Transmission, DTC Diagnosis and Testing).** **N** Go to step 2.
2. Inspect whether the transmission is in emergency mode	
	A. Road test vehicles. B. Inspect the transmission up-shift, down-shift, kicking down, engine brake, hydraulic torque converter lock. Is the transmission is emergency mode? **Y** The transmission is in the emergency mode. **N** Go to step 3.

Test Conditions	Details/Results/Actions
3. Inspect the throttle position sensor	
	A. Inspect the throttle position sensor. **Refer to: DTC Diagnostic Procedure Index (3.1.13 Electrical Control System - ME7, DTC Diagnosis and Testing).** Is the throttle position sensor normal? **Y** Go to step 4. **N** Repair or replace the throttle position sensor.
4. Inspect the neutral position switch	
	A. Inspect the neutral position switch. **Refer to: Park/Neutral Position Switch Inspection (3.2.1 Automatic Transmission, General Procedures).** Is the neutral position switch normal? **Y** Go to step 5. **N** Replace the neutral position switch.
5. Inspect the input and output shaft speed sensors	
	A. Inspect the input shaft speed sensor. **Refer to: Input Shaft Speed Sensor (NC2) Inspection (3.2.1 Automatic Transmission, General Procedures).** B. Inspect the output shaft speed sensor. **Refer to: Input Shaft Speed Sensor (SP) Inspection (3.2.1 Automatic Transmission, General Procedures).** Is the sensor normal? **Y** Go to step 6. **N** Replace the failed sensor.

Test Conditions	Details/Results/Actions
6. Inspect the TCM power supply and its ground circuit	
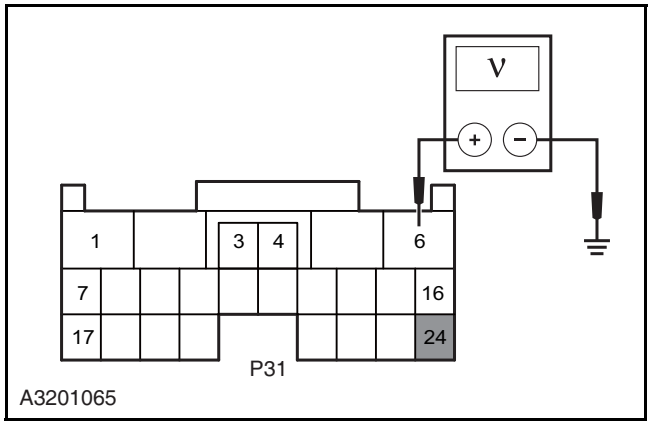	A. Turn the ignition switch to position "LOCK" and disconnect the battery negative cable. B. Disconnect the TCM wiring harness connector P31. C. Turn the ignition switch to "ON" position. D. Measure the voltage value between the terminal 6 and 24 of the TCM wiring harness connector P31 and the reliable grounding. **Standard Voltage Value: 11 ~ 14 V** E. Measure the resistance value between the terminal 1 and 23 of the TCM wiring harness connector P31 and the reliable grounding. **Standard Resistance Value: less than 5 Ω** Is the TCM power supply and the ground circuit normal? **Y** Go to step 7. **N** Repair the open circuit fault of the TCM power supply or ground circuit.
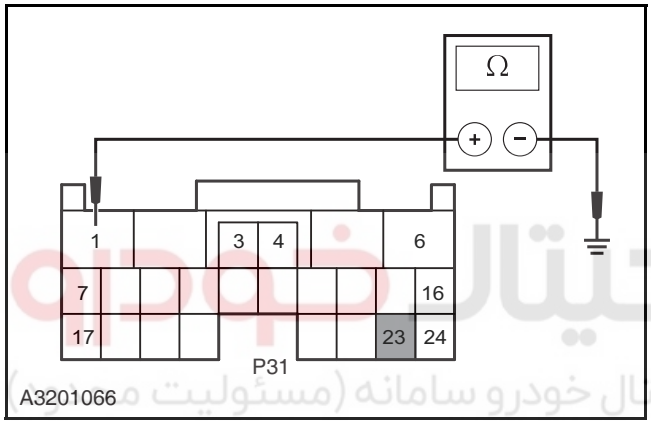	
7. Inspect the TCM	
	A. Remove the TCM. B. Install the faulted TCM in the vehicle of the same configuration in good condition. Is the vehicle normal after installing the TCM? **Y** Replace the automatic transmission. **N** Replace the TCM. **Refer to: TCM (3.2.1 Automatic Transmission, Removal and Installation).**

Abnormal Shift Shock During Static, Driving Diagnosis

Test Conditions	Details/Results/Actions
1. Inspect the DTC	
	A. Connect the diagnostic tool. B. Inspect the AT system with the diagnostic tool. Does the automatic transmission system have diagnosis DTC? **Y** **Refer to: DTC Diagnostic Procedure Index (3.2.1 Automatic Transmission, DTC Diagnosis and Testing).** **N** Go to step 2.
2. Inspect whether the transmission is in emergency mode	
	A. Road test vehicles. B. Inspect the transmission up-shift, down-shift, kicking down, engine brake, hydraulic torque converter lock Is the transmission is emergency mode? **Y** The transmission is in the emergency mode. **N** Go to step 3.
3. Inspect the wiring harness connector	
	A. Inspect whether the transmission wiring harness connector C28 connection is reliable without loosing, falling, dirt and damage. B. Check if connections of the TCM wiring harness connector P31 and P32 are reliable without becoming loose, falling, dirty and damage. Is the wiring harness connector inspected normal? **Y** Go to step 4. **N** Repair or replace the transmission wiring harness and TCM wiring harness.

Test Conditions	Details/Results/Actions
4. Inspect the engine	
	A. Inspect the engine for the following. • Air intake pressure temperature sensor • Throttle position sensor • Camshaft position sensor • Crankshaft position sensor • High voltage cable • Ignition coil • Spark plug • Ignition timing • Idle speed • Intake leak • Exhaust block Is the engine normal? **Y** Go to step 5. **N** Repair the fault part
5. Inspect the automatic transmission sensor	
	A. Inspect the following sensors of the automatic transmission: Input shaft speed sensor **Refer to: Input Shaft Speed Sensor (NC2) Inspection (3.2.1 Automatic Transmission, General Procedures).** Output shaft speed sensor **Refer to: Output Shaft Speed Sensor (SP) Inspection (3.2.1 Automatic Transmission, General Procedures).** Neutral position switch **Refer to: Park/Neutral Position Switch Inspection (3.2.1 Automatic Transmission, General Procedures).** Oil temperature sensor **Refer to: Oil Temperature Sensor Inspection (3.2.1 Automatic Transmission, General Procedures).** Is the sensor normal? **Y** Go to step 6. **N** Replace the failed sensor.

Test Conditions	Details/Results/Actions
6. Inspect the TCM power supply and its ground circuit	
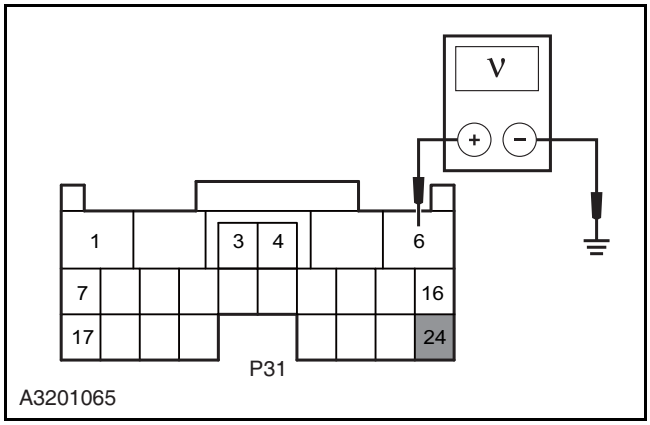	A. Turn the ignition switch to position "LOCK" and disconnect the battery negative cable. B. Disconnect the TCM wiring harness connector P31. C.Turn the ignition switch to "ON" position. D. Measure the voltage value between the terminal 6 and 24 of the TCM wiring harness connector P31 and the reliable grounding. **Standard Voltage Value: 11 ~ 14 V** E. Measure the resistance value between the terminal 1 and 23 of the TCM wiring harness connector P31 and the reliable grounding. **Standard Resistance Value: less than 5 Ω** Are the TCM power and ground connection normal? **Y** Go to step 7. **N** Repair the open the circuit fault of the TCM power or ground circuit.
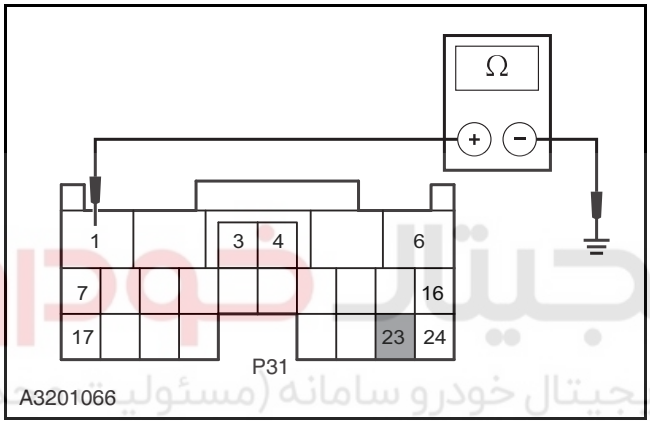	
7. Inspect the TCM	
	A. Remove the TCM. B. Install the faulted TCM in the vehicle of the same configuration in good condition. Is the vehicle normal after installing the TCM? **Y** Replace the automatic transmission. **N** Replace the TCM. **Refer to: TCM (3.2.1 Automatic Transmission, Removal and Installation).**

Failure to Enable Manual Mode Diagnosis

Test Conditions	Details/Results/Actions
1. Inspect the DTC	
	A. Connect the diagnostic tool. B. Inspect the AT system with the diagnostic tool. Does the automatic transmission system have the diagnosis DTC? **Y** **Refer to: DTC Diagnostic Procedure Index (3.2.1 Automatic Transmission, DTC Diagnosis and Testing).** **N** Go to step 2.
2. Inspect the manual mode switch	
	A. Inspect the manual mode switch. **Refer to: Manual Mode Switch Inspection (3.2.1 Automatic Transmission, General Procedures).** Is the switch inspected normal? **Y** Go to step 3. **N** Replace the gearshift mechanism. **Refer to: Gearshift Mechanism (3.2.2 Automatic Transmission/Transaxle-External Control, Removal and Installation).**
3. Inspect the manual mode switch ground circuit	
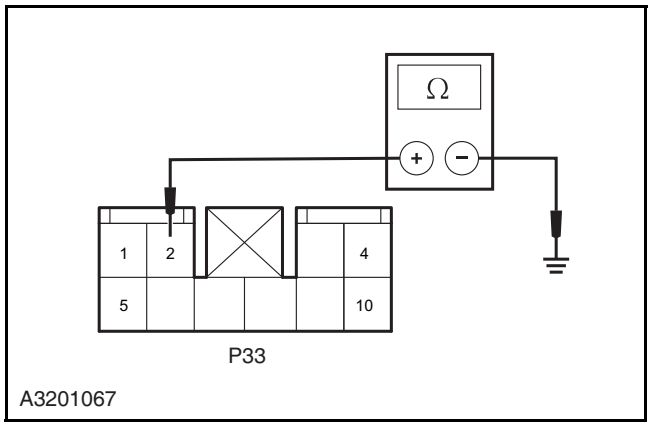	A. Turn the ignition switch to position "LOCK". B. Disconnect the manual mode switch wiring harness connector P33. C. Measure the resistance between the terminal 2 of the manual mode switch wiring harness connector P33 and the reliable grounding. **Standard Resistance Value: less than 5 Ω** Is the resistance value normal? **Y** Go to step 4. **N** Inspect and repair the open circuit fault between the terminal 2 of the manual mode switch wiring harness connector P33 and the grounding point G104.

Test Conditions	Details/Results/Actions
4. Inspect the circuit between the manual mode switch and TCM	
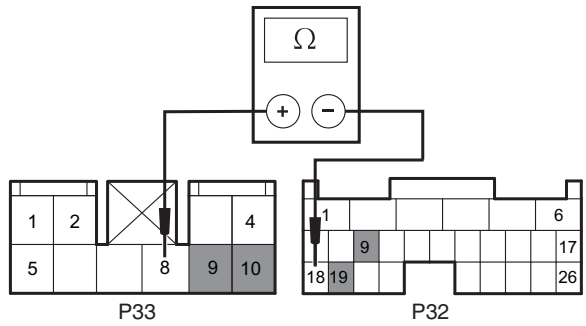 A3201068	A. Turn the ignition switch to position "LOCK" and disconnect the battery negative cable. B. Disconnect the gearshift handle wiring harness connector P33 and the TCM wiring harness connector P32. C. Measure the resistance between the terminal 8, 9 & 10 of the gearshift handle wiring harness connector P33 and the terminal 18, 19 & 9 of the TCM wiring harness connector P32 respectively. **Standard Resistance Value: less than 5 Ω** Is the resistance value normal? **Y** Go to step 5. **N** Inspect and repair the open circuit fault between the terminal 8, 9 & 10 of the gearshift handle wiring harness connector P33 and the terminal 18, 19 & 9 of the TCM wiring harness connector P32 respectively.
5. Inspect the TCM power supply and its ground circuit	
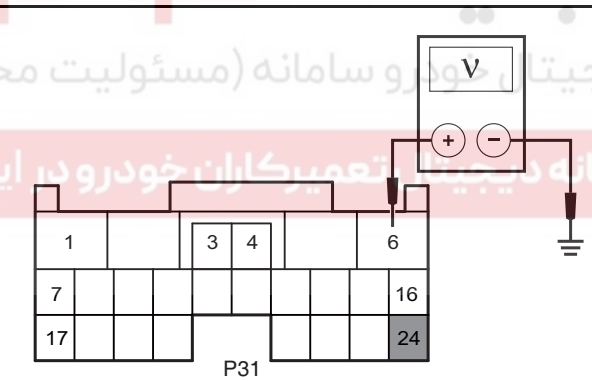 A3201065	A. Turn the ignition switch to position "LOCK" and disconnect the battery negative cable. B. Disconnect the TCM wiring harness connector P31. C. Turn the ignition switch to "ON" position. D. Measure the voltage value between the terminal 6 and 24 of the TCM wiring harness connector P31 and the reliable grounding. **Standard Voltage Value: 11 ~ 14 V** E. Measure the resistance value between the terminal 1 and 23 of the TCM wiring harness connector P31 and the reliable grounding. **Standard Resistance Value: less than 5 Ω** Are the TCM power and ground connection normal? **Y** Go to step 6. **N** Inspect and repair the open circuit fault of the TCM power supply or the ground circuit.
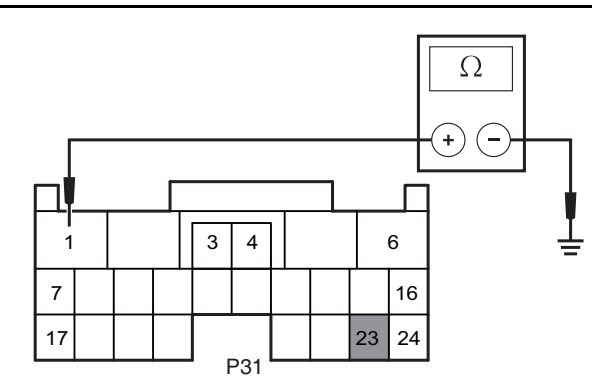 A3201066	

Test Conditions	Details/Results/Actions
6. Inspect the TCM	
	A. Remove the TCM. B. Install the faulted TCM in the vehicle of the same configuration in good condition. Is the vehicle normal after installing the TCM? **Y** Intermittent fault. **Refer to: Intermittent Fault Inspection (3.1.13 Engine Control System-ME7, Symptom Diagnosis and Testing).** **N** Replace the TCM. **Refer to: TCM (3.2.1 Automatic Transmission, Removal and Installation).**

DTC Diagnosis and Testing

Control Module Terminal List

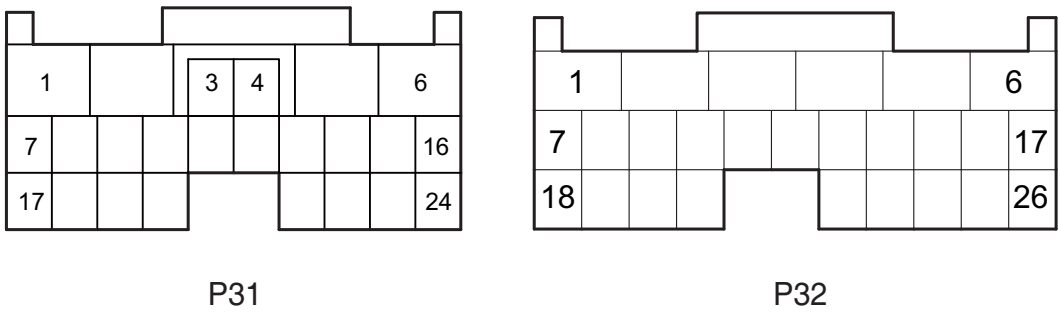

A3201074

Terminal No.	Description	Connection	Terminal Description	Status
P31-1	GND	0.5 BK	GND	At all times
P31-2	SLB1G	0.5 BN/RD	B1 shift control valve [SLB1-]	During gear shift
P31-3	SLUG	0.5 BU/YE	SLU lockup control valve [SLU-]	During gear shift
P31-4	SLB1	0.5 WH/OG	B1 shift control valve [SLB1+]	During gear shift
P31-5	SLU	0.5 BU/BK	SLU lockup control valve [SLU+]	When lockup
P31-6	B	0.5 RD/WH	Battery voltage	At all times
P31-7	CANL	0.5 LG	CAN communication low	At all times
P31-8	-	-	-	-
P31-9	SLC1G	0.5 VT/WH	C1 shift control valve [SLC1-]	During gear shift
P31-10	-	-	-	-
P31-11	OT	0.5 OG/WH	Oil temperature sensor [OT+]	Ignite"on"
P31-12	OTG	0.5 BK/BU	Oil temperature sensor	Ignite"on"
P31-13	-	-	-	-
P31-14	-	-	-	-
P31-15	-	-	-	-
P31-16	S1	0.5 VT	Transmission shift solenoid 1	During gear shift
P31-17	CANH	0.5 LG/BK	CAN communication high	At all times
P31-18	-	-	-	-

Terminal No.	Description	Connection	Terminal Description	Status
P31-19	SLC2G	0.5 BU/GN	C2 shift control valve [SLC2-]	During gear shift
P31-20	-	-	-	-
P31-21	SLC2	0.5 GN/BK	C2 shift control valve [SLC2+]	During gear shift
P31-22	SLC1	0.5 BN/GN	C1 shift control valve [SLC1+]	During gear shift
P31-23	GND	0.5 BK	TCU ground	At all times
P31-24	IG	0.5 RD/WH	Ignition switch power supply (IG1)	Ignite"on"
P32-1	R	YE/GN	Neutral ON switch signal (R)	At gear R
P32-2	-	-	-	-
P32-3	-	-	-	-
P32-4	-	-	-	-
P32-5	SP-	0.5 GN/YE	Vehicle speed sensor (VSS)	When driving
P32-6	NC2-	0.5 GY/RD	C2 speed sensor [NC2-]	When engine operates
P32-7	D	0.5 YE/BU	Neutral ON switch signal [D]	At gear D
P32-8	N	0.5 PK	Neutral ON switch signal [N]	At Gear N
P32-9	MS	0.5 GN/RD	Manual shift mode switch	Driver's command
P32-10	-	-	-	-
P32-11	-	-	-	-
P32-12	-	-	-	-
P32-13	-	-	-	-
P32-14	SP+	0.5 GN/BU	Vehicle speed sensor [SP+]	When driving
P32-15	-	-	-	-
P32-16	NC2+	0.5 GY/BU	C2 speed sensor [NC2+]	When engine operates
P32-17	-	-	-	-
P32-18	MS-	0.5 WH/RD	Manual downshift switch	Driver's command
P32-19	ms	0.5 YE	Manual upshift switch	Driver's command
P32-20	P	0.5 WH	Neutral ON switch signal [P]	In P position
P32-21	-	-	-	-
P32-22	-	-	-	-
P32-23	-	-	-	-
P32-24	-	-	-	-
P32-25	-	-	-	-
P32-26	-	-	-	-

DTC Code List

Fault Code	Description		Is the MIL lamp on
P0974	Gearshift solenoid S1	Power supply short circuit/ open circuit	ON
P0973		Short circuit to ground	ON
P0980	C1 solenoid valve	Short circuit to power supply	ON
P0979		Grounding short circuit/ open circuit	ON
P0983	C2 solenoid valve	Short circuit to power supply	ON
P0982		Grounding short circuit/ open circuit	ON
P0999	B1 solenoid valve	Short circuit to power supply	ON
P0998		Grounding short circuit/ open circuit	ON
P2763	Lockup solenoid	Short circuit to power supply	ON
P2764		Grounding short circuit/ open circuit	ON
P0722	Vehicle speed sensor	No pulse	ON
P0720		Electrical malfunction	ON
P0717	Input shaft speed sensor	No pulse	ON
P0715		Electrical malfunction	ON
P0713	Oil temperature sensor	Power supply short circuit/ open circuit	ON
P0712		Short circuit to ground	ON
P0711		Fluid temperature holding	ON
P0601	ROM	Internal check error	ON
P0562	Battery voltage	Low voltage	ON
P0563		High voltage	ON
P0604	RAM	Read/write error	ON
P0978	Solenoid feedback current	C1 solenoid current holding	ON
P0981		C2 solenoid current holding	ON
P0997		B1 solenoid current holding	ON
P2762		Lockup solenoid current holding	ON
P0603	EPROM	Read/write error	ON
P1205	Shifter manual mode problem	Shifter manual mode problem	OFF

Fault Code	Description		Is the MIL lamp on
P0706	Gear sensor	Short to ground (multi-position signal)	ON
P0705		Open circuit (no signal)	ON
P0766	Gearshift solenoid fault	Max. pressure holding (S1 solenoid pressure highest or C2 solenoid pressure lowest)	ON
P0741		Max. pressure holding (S1 solenoid pressure highest or lockup solenoid pressure lowest)	ON
P0751		Min. pressure holding	ON
P0762	C1 solenoid fault	Max pressure holding	ON
P0761		Min. pressure holding	ON
P0767	C2 solenoid fault	Max. pressure holding	ON
P0766		Min. pressure holding (C2 solenoid pressure highest or S1 solenoid pressure lowest)	ON
P2708	B1 olenoid fault	Max. pressure holding	ON
P2707		Min. pressure holding	ON
P0742	Lockup solenoid failure	Lockup solenoid remains OFF.	ON
P0741		Lockup solenoid remains OFF.	ON
P0731	No engine brake	C1, C2 or lockup solenoid pressure lowest	OFF
P1229	-	No power in D	OFF
U0001	CAN	CAN bus closure	ON
U0074		No CAN signal (no response)	ON
U0100		Lost communication with ECU	ON
U2081		Lost communication with ABS	OFF

Failure Protection List

DTC Code	Description	Failure Protection Operation	Prerequisite of Releasing Failure Protection
P0562	Battery voltage (low voltage)	Limp mode 5	Turn the ignition switch to position "ON" from "OFF".
P0563	Battery voltage (high voltage)	Limp mode 3	Turn the ignition switch to position "ON" from "OFF".
P0601	ROM (Interior calibration)	Limp mode 3	Turn the ignition switch to position "ON" from "OFF".
P0603	EPROM (Read/write error)	TCM uses the default value as initial value of EPROM	Turn the ignition switch to position "ON" from "OFF".
P0604	RAM (Read/write error)	Limp mode 3	Turn the ignition switch to position "ON" from "OFF".
P0705	Neutral position sensor (short to power/open circuit[no signal])	Limp mode 3	Turn the ignition switch to position "ON" from "OFF".
P0706	Neutral position sensor (short to ground[multiple signals])	Limp mode 3	Turn the ignition switch to position "ON" from "OFF".
P0711	Oil temperature sensor (temperature holding)	No self-learning control No lockup slip difference control No neutral position control Fluid temperature = 80 ℃	Turn the ignition switch to position "ON" from "OFF".
P0712	Oil temperature sensor (short circuit to the ground)	No self-learning control No lockup slip difference control No neutral position control Fluid temperature = 80 ℃	Turn the ignition switch to position "ON" from "OFF".
P0713	Oil temperature sensor Short circuit/open circuit to power supply	No self-learning control No lockup slip difference control No neutral position control Fluid temperature = 80 ℃	Turn the ignition switch to position "ON" from "OFF".
P0715	Input shaft speed sensor (short to power/to ground/ open circuit)	Limp mode 3 Change input speed calculation source	Turn the ignition switch to position "ON" from "OFF".
P0717	Input shaft speed sensor (No pulse)	Limp mode 3 Change input speed calculation source	Turn the ignition switch to position "ON" from "OFF".

DTC Code	Description	Failure Protection Operation	Prerequisite of Releasing Failure Protection
P0720	Output shaft speed sensor (short circuit to power/to ground/open circuit)	Limp mode 3 Change input speed calculation source	Turn the ignition switch to position "ON" from "OFF".
P0722	Output Shaft Speed Sensor (No pulse)	Limp mode 3 Change input speed calculation source	Turn the ignition switch to position "ON" from "OFF".
P0731	No engine brake	No self-learning control No adaptive shift control	Turn the ignition switch to position "ON" from "OFF".
P0741	Lock control solenoid (Off holding)	No self-learning control No lock-up control No lockup slip difference control	Turn the ignition switch to position "ON" from "OFF".
P0742	Lock control solenoid (Closure holding)	No self-learning control No adaptive shift control Torque limit at max. pressure of C2 solenoid = 40N.M(only in R position)	Turn the ignition switch to position "ON" from "OFF".
P0761	C1 shift control solenoid (Min. pressure holding)	Limp mode 2	Turn the ignition switch to position "ON" from "OFF".
P0762	C1 shift control solenoid (Max. pressure holding)	Limp mode 2	Turn the ignition switch to position "ON" from "OFF".
P0766	C2 shift control solenoid (Min. pressure holding)	Limp mode 2	Turn the ignition switch to position "ON" from "OFF".
P0767	C2 shift control solenoid (Max. pressure holding)	Limp mode 2	Turn the ignition switch to position "ON" from "OFF".
P0741	Gearshift solenoid S1 (Max. pressure holding[S1 pressure highest or SLU pressure lowest])	No self-learning control No lock-up control No lockup slip difference control	Turn the ignition switch to position "ON" from "OFF".
P0751	Gearshift solenoid S1 (Min. pressure holding)	No self-learning control No adaptive shift control Control of engine brake in 1st position is same as that in 2nd position.	Turn the ignition switch to position"ON" from "OFF".
P0766	Gearshift solenoid S1 (Max. pressure holding[S1 pressure highest or SLC2 pressure lowest])	Limp mode 2	Turn the ignition switch to position "ON" from "OFF".

DTC Code	Description	Failure Protection Operation	Prerequisite of Releasing Failure Protection
P0973	Gearshift solenoid S1 Short circuit to ground	Limp mode 4	Turn the ignition switch to position "ON" from "OFF".
P0974	Gearshift solenoid S1 Short circuit/open circuit to power supply	Limp mode 4	Turn the ignition switch to position "ON" from "OFF".
P0978	C1 pressure control solenoid (SLC1) (Feedback current holding)	Limp mode 1	Turn the ignition switch to position "ON" from "OFF".
P0979	C1 pressure control solenoid (SLC1) (Short to ground or open circuit)	Limp mode 1	Turn the ignition switch to position "ON" from "OFF".
P0980	C1 pressure control solenoid (SLC1) (Short to ground or open circuit)	Limp mode 1	Turn the ignition switch to position "ON" from "OFF".
P0981	C2 pressure control solenoid (SLC2) (Feedback current holding)	Limp mode 1	Turn the ignition switch to position "ON" from "OFF".
P0982	C2 pressure control solenoid (SLC2) (Short to ground or open circuit)	Limp mode 1	Turn the ignition switch to position "ON" from "OFF".
P0983	C2 pressure control solenoid (SLC2) Short circuit to power supply	Limp mode 1	Turn the ignition switch to position "ON" from "OFF".
P0997	B1 pressure control solenoid (SLB1) (Feedback current holding)	Limp mode 1	Turn the ignition switch to position "ON" from "OFF".
P0998	B1 pressure control solenoid (SLB1) (Short to ground or open circuit)	Limp mode 1	Turn the ignition switch to position "ON" from "OFF".
P0999	B1 pressure control solenoid (SLB1) (Short to ground or open circuit)	Limp mode 1	Turn the ignition switch to position "ON" from "OFF".
P1205	Shifter manual mode problem	No manual mode control	Turn the ignition switch to position "ON" from "OFF".

DTC Code	Description	Failure Protection Operation	Prerequisite of Releasing Failure Protection
P1229	No power in D position	-	Turn the ignition switch to position "ON" from "OFF".
P2707	B1 pressure control solenoid (SLB1) (Min. pressure holding)	Limp mode 2	Turn the ignition switch to position "ON" from "OFF".
P2708	B1 pressure control solenoid (SLB1) (Max. pressure holding)	Limp mode 2	Turn the ignition switch to position "ON" from "OFF".
P2762	Lockup solenoid SLU Short circuit to power supply	Limp mode 1	Turn the ignition switch to position "ON" from "OFF".
P2763	Lockup solenoid SLU Short circuit to power supply	No self-learning control No lock-up control No lockup slip difference control No neutral control function No adaptive shift control SLC2 max. pressure limit = 40N/m(only in R position)	Turn the ignition switch to position "ON" from "OFF".
P2764	Lockup solenoid SLU Short circuit or open circuit to grounding	No self-learning control No lock-up control No lockup slip difference control No neutral control function No adaptive shift control SLC2 max. pressure limit = 40N/m(only in R position)	Turn the ignition switch to position "ON" from "OFF".
U0001	CAN bus interruption	Limp mode 3	Turn the ignition switch to position "ON" from "OFF".
U0074	No CAN signal	Limp mode 3	Turn the ignition switch to position "ON" from "OFF".
U0100	Lost communication with ECU	Limp mode 3	Turn the ignition switch to position "ON" from "OFF".
U2081	Lost communication with ABS	No self-learning control No neutral position control No adaptive shift control Brake master cylinder pressure = 0	Turn the ignition switch to position "ON" from "OFF".

Data Stream List

Data Stream Name	Ignition switch "ON"	Engine speed 2,500 rpm	Engine Idle Speed
Shift solenoid S1 feedback status	On	On	On
C1 solenoid feedback current	190 mA	190 mA	190 mA
C2 solenoid feedback current	900 mA	900 mA	900 mA
B1 solenoid feedback current	100 mA	100 mA	100 mA
Lockup solenoid feedback current	200 mA	200 mA	200 mA
Transmission output speed	0.0 rpm	0.0 rpm	0.0 rpm
Transmission turbine speed	0.0 rpm	2697 rpm	687.00 rpm
Transmission oil temperature	85 deg C	85 deg C	85 deg C
Battery voltage	12.10 V	13.99 V	13.95 V
Engine speed	0.0 rpm	2455.55 rpm	712.25 rpm
Engine torque	0.0 %	13.72 %	10.27 %
Driver request torque	70 %	13 %	10%
Brake signal	Off	Off	Off
Acceleration pedal position	0 %	4 %	0 %
Torque constant	200.00 Nm	200.00 Nm	200.00 Nm
Friction torque	8.53 %	11.27 %	7.07 %
Gearshift handle position	P gear	P gear	P gear
Emergency mode	No emergency mode	No emergency mode	No emergency mode
Vehicle speed	0 km/h	0 km/h	0 km/h
Reduce torque request	100.00 %	100.00 %	100.00 %
Limit torque request	100.00 %	100.00 %	100.00 %
Current lockup status of hydraulic torque converter	Unlocked	Unlocked	Unlocked
Gear shift mode	Economical mode	Economical mode	Economical mode
Current gear	Park	Park	Park
Speed ratio	0.0	7.97	7.97
Fault lamp information	Off	Off	Off
MIL lamp request	Off	Off	Off
Indicator request	Off	Off	Off
DTC requests to store freeze fame data	P0000	P0000	P0000
Engine coolant temperature	-40 ℃	-40 ℃	-40 ℃
Engine speed	0.0 rpm	0.0 rpm	0.0 rpm
Vehicle speed	0 km/h	0 km/h	0 km/h
Control module voltage	0.0 V	0.0 V	0.0 V

Active test list

Diagnostic Tool Item	Description	Control Range	Diagnostic Description
Shift solenoid S1 control	Switch on/off gearshift solenoid S1	On/Off	Control the working state of gear-shift solenoid S1.
C1 solenoid current	Switch on/off C1 solenoid	Adjustment value 0 ~ 2550 mA	Control the working condition of C1 solenoid.
C2 solenoid current	Switch on/off C2 solenoid	Adjustment value 0 ~ 2550 mA	Control the working condition of C2 solenoid.
B1 solenoid current	Switch on/off B1 solenoid	Adjustment value 0 ~ 2550 mA	Control the working condition of B1 solenoid.
Lockup solenoid cur-rent	On/Off Lockup sole-noid	Adjustment value 0 ~ 2550 mA	Control the working state of lockup solenoid SLU.

DTC Diagnostic Procedure Index

Fault Code	Description	Diagnosis Procedures
P0562	TCM detects the system voltage low.	Refer to: DTC P0562, P0563
P0563	TCM detects the system voltage high	
P0601	Internal ROM malfunction of TCM	Refer to: DTC P0601, P0603, P0604
P0603	Internal EEPROM malfunction of TCM	
P0604	Internal RAM malfunction of TCM	
P0705	Neutral position switch circuit short to power or open	Refer to: DTC P0705, P0706
P0706	Neutral position short circuit short to ground	
P0711	ATF temperature sensor (OT) temperature holding	Refer to: DTC P0711, P0712, P0713
P0712	ATF temperature sensor (OT) short circuit to ground	
P0713	ATF temperature sensor (OT) short circuit to power/open circuit	
P0715	Input shaft speed sensor short circuit to power or ground/open circuit	Refer to: DTC P0715, P0717
P0717	No input shaft speed sensor signal fault	
P0720	Output shaft speed sensor short to power or ground/open circuit	Refer to: DTC P0720, P0722
P0722	No output shaft speed sensor signal	
P0731	No engine brake (C1 solenoid pressure lowest or C2 solenoid pressure lowest or lockup solenoid pressure lowest)	Refer to: DTC P0731
P0741	Shift solenoid S1 max. pressure holding or SLU min. pressure holding	Refer to: DTC P0741, P0751, P0766, P0973, P0974 Refer to: DTC P0741, P0742, P2762, P2763, P2764
P0742	Lockup solenoid [SLU] closure holding	Refer to: DTC P0741, P0742, P2762, P2763, P2764
P2762	Lockup solenoid [SLU] feedback current holding	
P2763	Lockup solenoid [SLU] short circuit to power	
P2764	Lockup solenoid [SLU] short circuit to ground or open circuit	

Fault Code	Description	Diagnosis Procedures
P0761	C1 shift control solenoid [SLC1] min. pressure holding	Refer to: DTC P0761, P0762, P0978, P0979, P0980
P0762	C1 shift control solenoid [SLC1] max. pressure holding	
P0978	C1 pressure control solenoid[SLC1] feedback current holding	
P0979	C1 shift control solenoid [SLC1] short to ground/ open circuit	
P0980	C1 shift control solenoid [SLC1] short to power	
P0766	C2 shift control solenoid [PSLC2] max. pressure holding or S1 solenoid min. pressure holding	Refer to: DTC P0766, P0767, P0982, P0983 Refer to: DTC P0741, P0751, P0766, P0973, P0974
P0767	C2 shift control solenoid [SLC2] max. pressure holding	Refer to: DTC P0766, P0767, P0981, P0982, P0983
P0981	C2 shift control solenoid [SLC2] feedback current holding	
P0982	C2 pressure control solenoid [SLC2] short circuit to ground/open circuit	
P0983	C2 pressure control solenoid [SLC2] short circuit to power	
P0751	Shift solenoid (S1) min. pressure holding	Refer to: DTC P0741, P0751, P0766, P0973, P0974
P0766	Shift solenoid (S1) max. pressure holding	
P0973	Shift solenoid (S1) short circuit to power/open circuit	
P0974	Shift solenoid(S1) short circuit to ground	
P2707	B1 pressure control solenoid [SLB1] min. pressure holding	Refer to: DTC P2707, P2708, P0997, P0998, P0999
P2708	B1 pressure control solenoid [SLB1] max. pressure holding	
P0997	B1 pressure control solenoid [SLB1] feedback current holding	
P0998	B1 pressure control solenoid [SLB1] short to ground/open circuit	
P0999	B1 pressure control solenoid [SLB1] short to power	
P1205	Shifter manual mode problem	Refer to: DTC P1205
P1229	No power in D	Refer to: DTC P1229

Fault Code	Description	Diagnosis Procedures
U0001	CAN bus interruption	Refer to: DTC U0001, U0074, U0100, U2081
U0074	No CAN signal	
U0100	Lost communication with ECU	
U2081	Lost communication with ABS	

DTC P0562, P0563

1. Fault Code Description

Fault Code	Description	Definition
P0562	TCM detects system voltage low	The regular battery power passes through the 10 A fuse IF04 of the I/P fuse and relay box P01 to arrive at the terminal 24 of the TCM wiring harness connector P31 directly. When the ignition switch is set to the "ON" position, the battery power passes through the 10 A fuse EF10 of the engine compartment fuse and relay box C01 to arrive at the terminal 6 of the TCM wiring harness connector P31 directly.
P0563	TCM detects system voltage high	

2. Possible Sources

Fault Code	Test Tactics	Setting Conditions (Control Strategy)	Fault
P0562	Hardware and circuit inspection	• With the engine at idle and the communication with TCM normal, if TCM detects the voltage of ignition switch is below 9V for 1s continuously, then a fault is detected once. DTC will make judgment after 20 fault detections.	• Inspect TCM power supply and ground circuit. • TCM • Battery • Alternator
P0563		• With the engine at idle and the communication with TCM normal, if TCM detects the voltage of ignition switch is above 18V for 1s continuously, then a fault is detected once. DTC will make judgment after 20 fault detections.	

3. Diagnosis

Test Conditions	Details/Results/Actions
1. Inspect the DTC	
	A. Connect the diagnostic tool. B. Diagnose the automatic transmission with the diagnostic tool. Is there any other DTCs except for P0562, P0563? **Y** Carry out the DTC diagnosis. **Refer to: DTC Diagnostic Procedure Index (3.2.1 Automatic Transmission, DTC Diagnosis and Testing).** **N** Go to step 2.
2. Inspect the battery voltage	
	A. Measure the battery voltage. **Standard Voltage Value: 11 ~ 14 V** B. Start the engine. C. Measure the voltage at both positive and negative ends of battery. **Standard Voltage Value: 11 ~ 16 V** Is the voltage normal? **Y** Go to step 3. **N** Inspect and repair the charging system and battery. Verify the system is normal.
3. Inspect the fuse	
	A.Inspect the fuse IF04 & EF10. **Fuse Rated Capacity: 10 A** Is the fuse normal? **Y** Go to step 4. **N** Inspect and repair the fuse circuit, replace the fuse in rated capacity.

Test Conditions	Details/Results/Actions
4. Inspect the TCM power supply circuit	
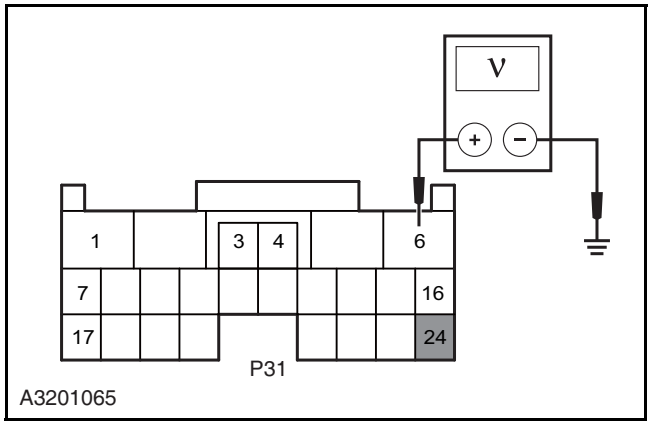	A. Turn the ignition switch to position "LOCK" and disconnect the battery negative cable. B. Disconnect the TCM wiring harness connector P31. C. Connect the battery negative cable. D. Turn the ignition switch to position "ON". E. Measure the voltage between the terminal 6 and 24 of the TCM wiring harness connector P31 and the reliable grounding. **Standard Voltage Value: 11 ~ 14 V** Is the circuit normal? **Y** Go to step 5. **N** Inspect and repair the open circuit fault between the terminal 6 of the TCM wiring harness connector P31 and the terminal 19 of the fuse EF10 of the engine compartment fuse and relay box C01. Inspect and repair the open circuit fault between the terminal 24 of the TCM wiring harness connector P31 and the terminal 7 of the fuse IF04 in the I/P fuse and relay box P01.
5. Inspect the TCM ground circuit	
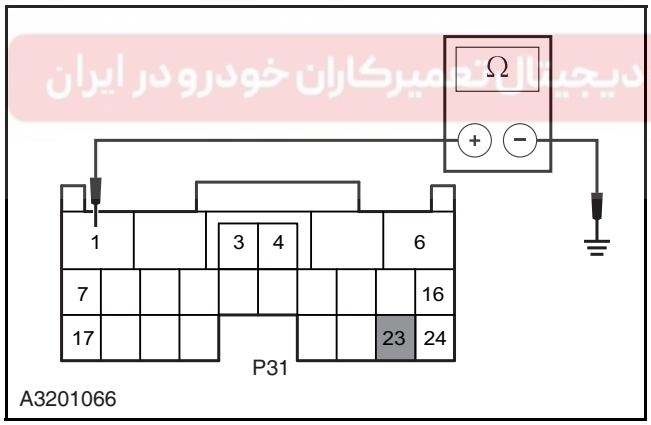	A. Turn the ignition switch to position "LOCK" and disconnect the battery negative cable. B. Disconnect the TCM wiring harness connector P31. C. Measure the resistance between the terminal 1 and 23 of the TCM wiring harness connector P31 and the reliable grounding. **Standard Resistance Value: less than 5 Ω** Is the resistance value normal? **Y** Go to step 6. **N** Inspect and repair the open circuit fault between the TCM wiring harness connector P31 terminal 1 and 23 and the grounding point G104. Verify the system is normal.

Test Conditions	Details/Results/Actions
6. Inspect the TCM	
	A. Remove the TCM. B. Install the faulted TCM in the vehicle of the same configuration in good condition. Is the vehicle normal after installing the TCM? **Y** Replace the TCM. **Refer to: TCM (3.2.1 Automatic Transmission, Removal and Installation).** **N** Intermittent fault. **Refer to: Intermittent Fault Diagnosis (3.1.13 Electrical Control System - ME7, Symptom Diagnosis and Testing).**

DTC P0601, P0603, P0604

1. Fault Code Description

Fault Code	Description	Definition
P0601	Internal ROM malfunction of TCM	Turn the ignition switch to the "ON" position, TCM enters the internal self-test procedure to check that all systems are normal internally.
P0603	Internal EEPROM malfunction of TCM	
P0604	Internal RAM malfunction of TCM	

2. Possible Sources

Fault Code	Test Tactics	Setting Conditions (Control Strategy)	Fault
P0601 P0603 P0604	TCM hardware and circuit inspection	• Turn the ignition switch to the "ON" position, the module enters self-test procedure and detects hardware malfunction.	• Control module circuit • TCM

3. Diagnosis

Test Conditions	Details/Results/Actions
1. Inspect the DTC	
	A. Connect the diagnostic tool. B. Diagnose the automatic transmission with the diagnostic tool. Is there any DTC besides P0601, P0603 and P0604? **Y** Carry out the DTC diagnosis. **Refer to: DTC Diagnostic Procedure Index (3.2.1 Automatic Transmission, DTC Diagnosis and Testing).** **N** Go to step 2.

Test Conditions	Details/Results/Actions
2. Inspect the TCM power supply circuit	
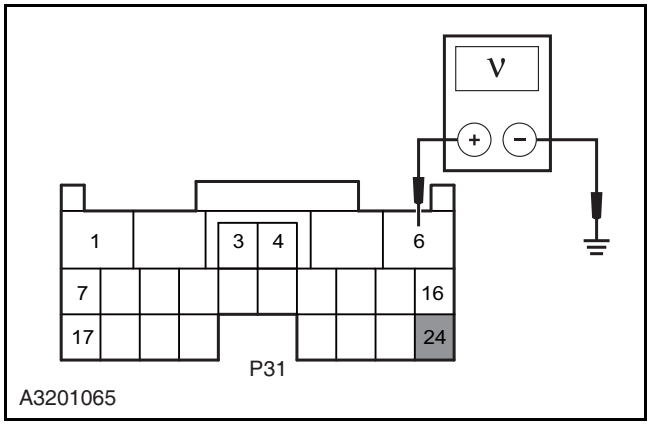	A. Turn the ignition switch to position "LOCK" and disconnect the battery negative cable. B. Disconnect the TCM wiring harness connector P31. C. Connect the battery negative cable. D. Turn the ignition switch to position "ON". E. Measure the voltage between the terminal 6 and 24 of the TCM wiring harness connector P31 and the reliable grounding. **Standard Voltage Value: 11 ~ 14 V** Is the circuit normal? **Y** Go to step 3. **N** Inspect and repair the open circuit fault between the terminal 6 of the TCM wiring harness connector P31 and the terminal 19 of the fuse EF10 of the engine compartment fuse and relay box C01. Inspect and repair the open circuit fault between the terminal 24 of the TCM wiring harness connector P31 and the terminal 7 of the fuse IF04 in the I/P fuse and relay box P01.
3. Inspect the TCM ground circuit	
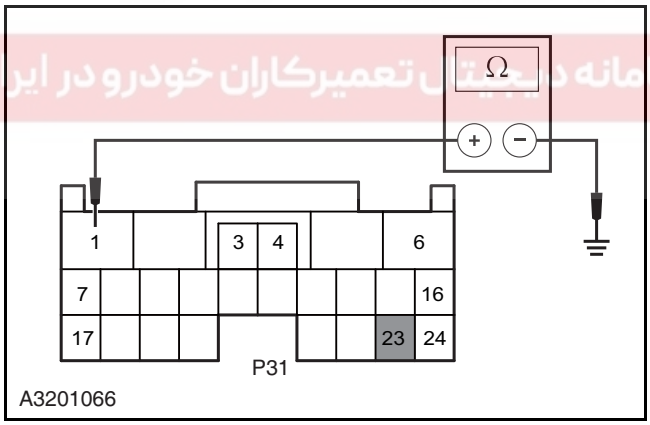	A. Turn the ignition switch to position "LOCK" and disconnect the battery negative cable. B. Disconnect the TCM wiring harness connector P31. C. Measure the resistance between the terminal 1 and 23 of the TCM wiring harness connector P31 and the reliable grounding. **Standard Resistance Value: less than 5 Ω** Is the resistance value normal? **Y** Go to step 4. **N** Inspect and repair the open circuit fault between the TCM wiring harness connector P31 terminal 1 and 23 and the grounding point G104. Verify the system is normal.

Test Conditions	Details/Results/Actions
4. Inspect the TCM	
	A. Remove the TCM. B. Install the faulted TCM in the vehicle of the same configuration in good condition. Is the vehicle normal after installing the TCM? **Y** Replace the TCM. **Refer to: TCM (3.2.1 Automatic Transmission, Removal and Installation).** **N** Intermittent fault. **Refer to: Intermittent Fault Diagnosis (3.1.13 Electrical Control System - ME7, Symptom Diagnosis and Testing).**

DTC P0705, P0706

1. Fault Code Description

Fault Code	Description	Definition
P0705	Neutral position switch circuit short to power or open	The neutral position switch sends the gear range message to the TCM via 4 circuits, with the terminal 6, 1, 9 & 7 of the neutral position switch wiring harness connector C25 connected to the terminal 20, 1, 8 & 7 of the TCM wiring harness connector P32 respectively.
P0706	Neutral position short circuit short to ground	

2. Possible Sources

Fault Code	Test Tactics	Setting Conditions (Control Strategy)	Fault
P0705	Hardware and circuit inspection	• With the vehicle moving at 30 km/h and the communication with TCM normal, TCM detects no neutral position switch signal for 30 s or a longer time continuously.	• Neutral position switch circuit • TCM • Neutral position switch
P0706		• With the ignition switch turned to the "ON" position, TCM detects two and more signals from neutral position switch for 1s or a longer time continuously and this symptom occurs 5 times.	

3. Diagnosis

Test Conditions	Details/Results/Actions
1. General inspection	
	A. Inspect whether the neutral position switch siring harness connector is reliable without dropping and dirt. Is the connection of neutral position switch wiring harness connector normal? **Y** Go to step 2. **N** Repair the fault.

Test Conditions	Details/Results/Actions
2. Inspect the DTC	
	A. Connect the diagnostic tool. B. Turn the ignition switch to "ON" position. C. Diagnose the automatic transmission with the diagnostic tool. Is there any other DTCs except for P0705 and P0706? **Y** Carry out the DTC diagnosis. **Refer to: DTC Diagnostic Procedure Index (3.2.1 Automatic Transmission, DTC Diagnosis and Testing).** **N** Go to step 3.
3. Inspect the neutral position switch data stream	
	A. Read the automatic transmission data stream with the diagnostic tool: observe the data stream of the current gear position and the corresponding gear position when gearshift handle is moved into a position. Does the data stream correspond to actual gear? **Y** **Refer to: Intermittent Fault Diagnosis (3.1.13 Electrical Control System - ME7, DTC Diagnosis and Testing).** **N** Go to step 4.
4. Inspect the neutral position switch	
	A. Turn the ignition switch to position "LOCK". B. Remove the neutral position switch. C. Install the neutral position switch of the same type in good working order on the vehicle. D. Vehicle driving test Is the fault fixed? **Y** Replace the neutral position switch. **N** Go to step 5.
5. Inspect the circuit between the neutral position switch and TCM	

Test Conditions	Details/Results/Actions
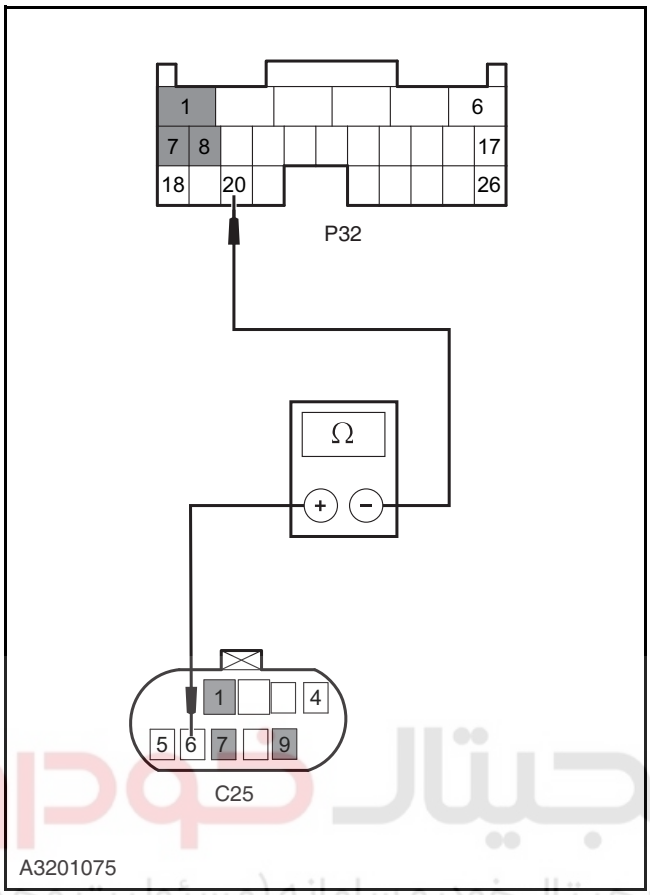	A. Turn the ignition switch to "LOCK" position and disconnect the battery negative cable. B. Disconnect the neutral position switch wiring harness connector C25. C. Disconnect the TCM wiring harness connector P32. D. Connect the battery negative cable. E. Measure the resistance between the terminal 6, 1, 9 & 7 of the neutral position switch wiring harness connector C25 and the terminal 20, 1, 8 & 7 of the TCM wiring harness connector P32 respectively, and check to see if the circuit is open. **Standard Resistance Value: less than 5 Ω** F. Measure the resistance value between the terminal 6, 1, 9 and 7 of the neutral position switch wiring harness connector C25 and the reliable grounding. Inspect for short circuit to ground. **Standard Resistance Value: 10 MΩ or more** G. Measure the voltage between the terminal 6, 1, 9 and 7 of the neutral position switch wiring harness connector C25 and the reliable grounding. Inspect for short circuit to power supply. **Standard Voltage Value: 0 V** Is the circuit normal? **Y** Go to step 6. **N** Repair the circuit fault between the neutral position switch wiring harness connector C25 and the TCM wiring harness connector P32.
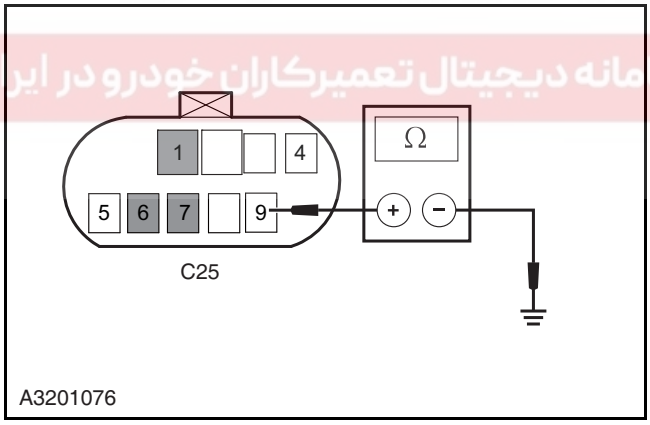	
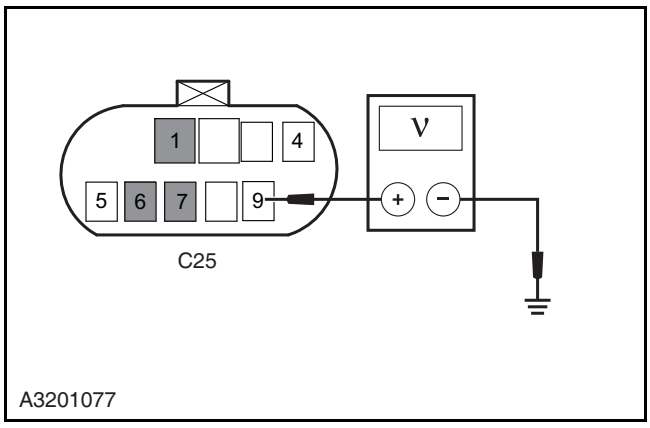	

Test Conditions	Details/Results/Actions
6. Inspect the neutral position switch ground circuit	
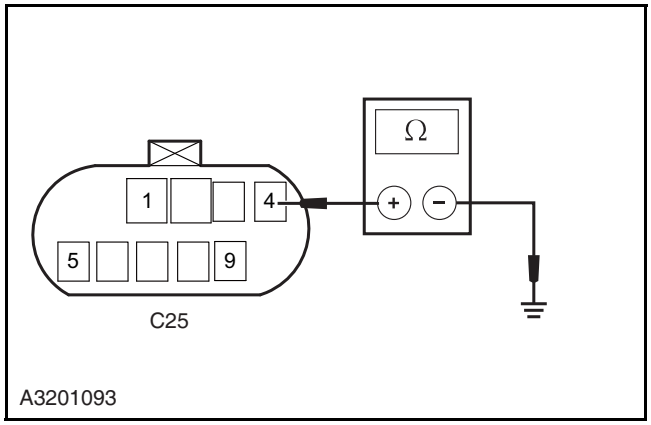	A. Turn the ignition switch to position "LOCK". B. Disconnect the neutral position switch wiring harness connector C25. C. Measure the resistance value between the terminal 4 of the neutral position switch wiring harness connector C25 and the reliable grounding. **Standard Resistance Value: less than 5 Ω** Is the resistance value normal? **Y** Go to step 7. **N** Inspect and repair the open circuit fault between the terminal 4 of the neutral position switch harness connector C25 and the grounding point G302.
7. Inspect the TCM power supply circuit	
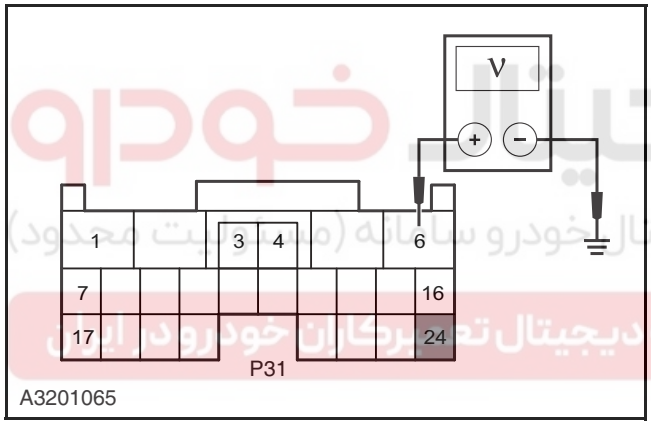	A. Turn the ignition switch to position "LOCK" and disconnect the battery negative cable. B. Disconnect the TCM wiring harness connector P31. C. Connect the battery negative cable. D. Turn the ignition switch to position "ON". E. Measure the voltage between the terminal 6 and 24 of the TCM wiring harness connector P31 and the reliable grounding. **Standard Voltage Value: 11 ~ 14 V** Is the circuit normal? **Y** Go to step 8. **N** Inspect and repair the open circuit fault between the terminal 6 of the TCM wiring harness connector P31 and the terminal 19 of the fuse EF10 of the engine compartment fuse and relay box C01. Inspect and repair the open circuit fault between the terminal 24 of the TCM wiring harness connector P31 and the terminal 7 of the fuse IF04 in the I/P fuse and relay box P01.

Test Conditions	Details/Results/Actions
8. Inspect the TCM ground circuit	
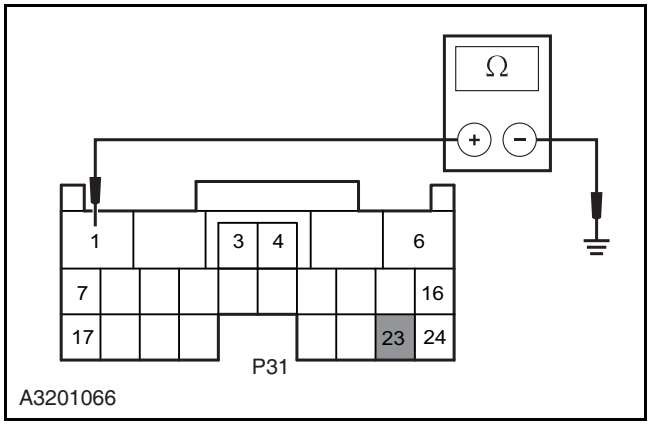	A. Turn the ignition switch to position "LOCK" and disconnect the battery negative cable. B. Disconnect the TCM wiring harness connector P31. C. Measure the resistance between the terminal 1 and 23 of the TCM wiring harness connector P31 and the reliable grounding. **Standard Resistance Value: less than 5 Ω** Is the resistance value normal? **Y** Go to step 9. **N** Inspect and repair the open circuit fault between the TCM wiring harness connector P31 terminal 1 and 23 and the grounding point G104. Verify the system is normal.
9. Inspect the TCM	
	A. Remove the TCM. B. Install the faulted TCM in the vehicle of the same configuration in good condition. Is the vehicle normal after installing the TCM? **Y** Replace the TCM. **Refer to: TCM (3.2.1 Automatic Transmission, Removal and Installation).** **N** Intermittent fault. **Refer to: Intermittent Fault Diagnosis (3.1.13 Electrical Control System - ME7, Symptom Diagnosis and Testing).**

DTC P0711, P0712, P0713

1. Fault Code Description

Fault Code	Description	Definition
P0711	ATF temperature sensor (OT) holding	The ATF temperature sensor is connected with the terminal 11 and 12 of the TCM wiring harness connector P31 by the terminal 1 and 7 of the automatic transmission wiring harness connector C28, inspect the transmission temperature, and the oil temperature sensor is a negative temperature coefficient resistor.
P0712	ATF temperature sensor (OT) short to ground	
P0713	ATF temperature sensor (OT) short to power/ open circuit	

2. Possible Sources

Fault Code	Test Tactics	Setting Conditions (Control Strategy)	Fault
P0711	Hardware inspection Circuit inspection	• With the gearshift handle in D position and the vehicle in operation, if TCM detects no change in transmission oil temperature data for 10 min or a longer time continuously, then a fault is detected and DTC will make judgment after occurrence of a fault.	• Transmission wiring harness • Oil temperature sensor • TCM
P0712		• With ignition switch turned to the "ON" position, if TCM detects transmission oil temperature is 200 ℃ or higher for 10s or a longer time continuously, then a fault is detected and DTC will make judgment after 6 detections.	
P0713		• With the gearshift handle in D or R position and the vehicle moving for 1 min or a longer time, if TCM detects transmission oil temperature is -55 ℃ or lower for 1 s or a longer time continuously, then a fault is detected and DTC will make judgment after 12 detections.	

3. Diagnosis

Test Conditions	Details/Results/Actions
1. General inspection	
	A. Inspect whether the automatic transmission wiring harness connector C28 is reliable without dropping and damage. Is the automatic transmission wiring harness connector normal? **Y** Go to step 2. **N** Repair the automatic transmission wiring harness connector.
2. Inspect the DTC	
	A. Connect the diagnostic tool. B. Diagnose the automatic transmission system DTC with diagnostic tool. Any other DTCs expect P0711, P0712, P0713? **Y** Carry out the DTC diagnosis. **Refer to: DTC Diagnostic Procedure Index (3.2.1 Automatic Transmission, DTC Diagnosis and Testing).** **N** Go to step 3.
3. Inspect the oil temperature sensor data stream	
	A. Read the automatic transmission data stream with the diagnostic tool: transmission oil temperature. Is the data stream normal? **Y** **Refer to: Intermittent Fault Diagnosis (3.1.13 Electrical Control System - ME7, Symptom Diagnosis and Testing).** **N** Go to step 4.

Test Conditions	Details/Results/Actions
4. Inspect the oil temperature sensor	
	A. Turn the ignition switch to position "LOCK". B. Disconnect the automatic transmission wiring harness connector C28. C. Inspect the oil temperature sensor. **Refer to: Oil Temperature Sensor (3.2.1 Automatic Transmission, General Procedures).** Is the resistance value normal? **Y** Go to step 5. **N** Replace the oil temperature sensor.
5. Inspect the circuit from oil temperature sensor to TCM	

Test Conditions	Details/Results/Actions
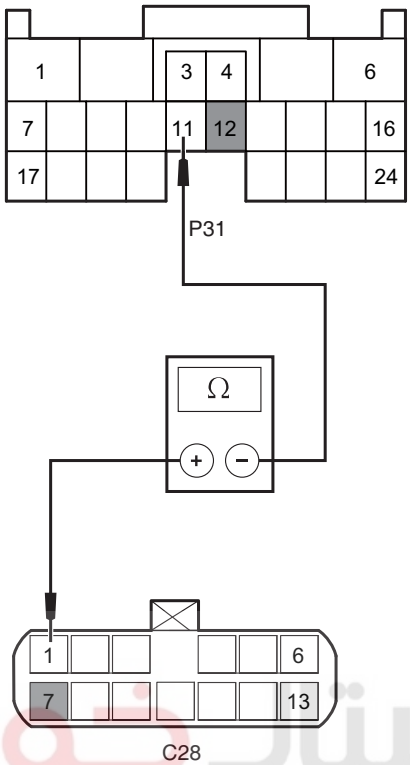 A3201127	A. Turn the ignition switch to "LOCK" position and disconnect the battery negative cable. B. Disconnect the automatic transmission wiring harness connector C28. C. Disconnect the TCM wiring harness connector P31. D. Measure the resistance value between the terminal 1 and 7 of the automatic transmission wiring harness connector C28 and the terminal 11 and 12 of the TCM wiring harness connector P31, inspect if the circuit is open. **Standard Resistance Value: less than 5 Ω** E. Measure the resistance between terminal 1 and 7 of wiring harness connector C28 in Automatic Transmission and grounding, inspect if there is short circuit to ground. **Standard Resistance Value: 10 MΩ or more** F. Measure the voltage between terminal 1 and 7 of wiring harness connector C28 in Automatic Transmission and grounding, inspect if there is short circuit to the power. **Standard Voltage Value: 0 V** Is the oil temperature sensor circuit normal? **Y** Go to step 6. **N** Repair the circuit fault between the terminal 1 & 7 of the automatic transmission wiring harness connector C28 and the terminal 11 & 12 of the TCM wiring harness connector P31 respectively.
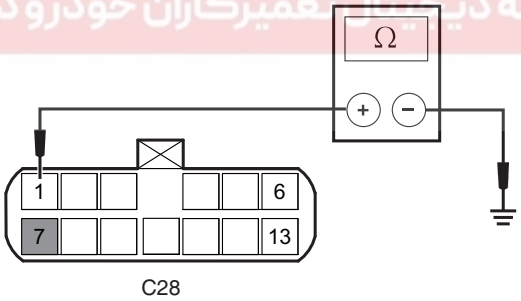 A3201095	
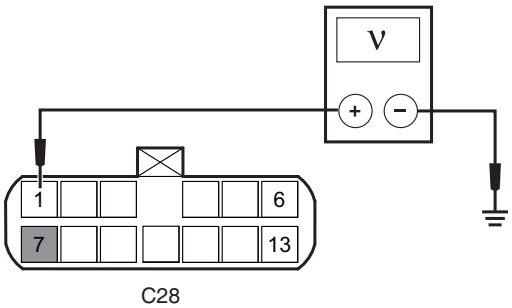 A3201096	

Test Conditions	Details/Results/Actions
6. Inspect the TCM power supply circuit	
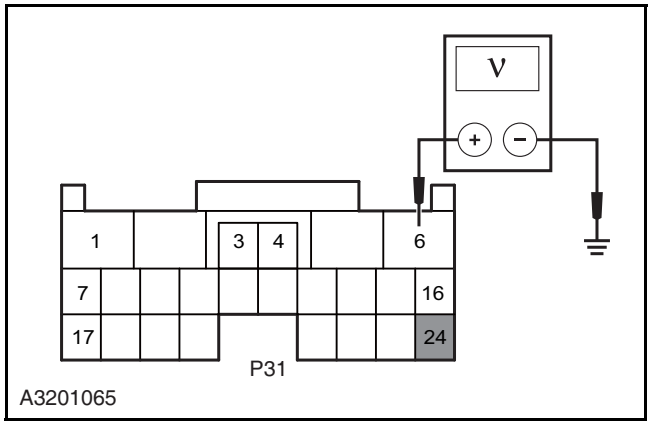	A. Turn the ignition switch to position "LOCK" and disconnect the battery negative cable. B. Disconnect the TCM wiring harness connector P31. C. Connect the battery negative cable. D. Turn the ignition switch to position "ON". E. Measure the voltage between the terminal 6 and 24 of the TCM wiring harness connector P31 and the reliable grounding. **Standard Voltage Value: 11 ~ 14 V** Is the circuit normal? **Y** Go to step 8. **N** Inspect and repair the open circuit fault between the terminal 6 of the TCM wiring harness connector P31 and the terminal 19 of the fuse EF10 of the engine compartment fuse and relay box C01. Inspect and repair the open circuit fault between the terminal 24 of the TCM wiring harness connector P31 and the terminal 7 of the fuse IF04 in the I/P fuse and relay box P01.
7. Inspect the TCM ground circuit	
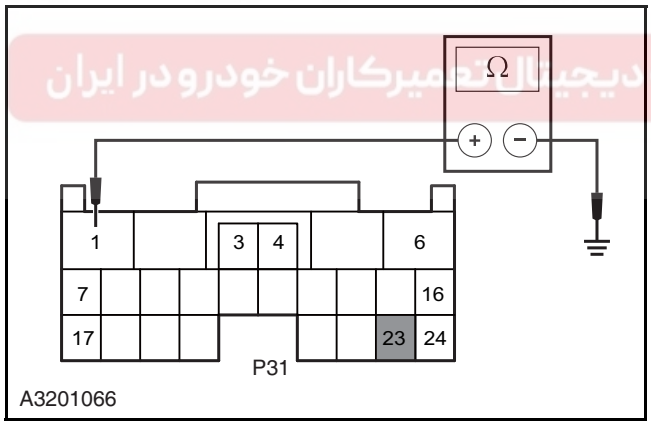	A. Turn the ignition switch to position "LOCK" and disconnect the battery negative cable. B. Disconnect the TCM wiring harness connector P31. C. Measure the resistance between the terminal 1 and 23 of the TCM wiring harness connector P31 and the reliable grounding. **Standard Resistance Value: less than 5 Ω** Is the resistance value normal? **Y** Go to step 9. **N** Inspect and repair the open circuit fault between the TCM wiring harness connector P31 terminal 1 and 23 and the grounding point G104. Verify the system is normal.

Test Conditions	Details/Results/Actions
8. Inspect the TCM	
	A. Remove the TCM. B. Install the faulted TCM in the vehicle of the same configuration in good condition. Is the vehicle normal after installing the TCM? **Y** Replace the TCM. **Refer to: TCM (3.2.1 Automatic Transmission, Removal and Installation).** **N** Intermittent fault. **Refer to: Intermittent Fault Diagnosis (3.1.13 Electrical Control System - ME7, Symptom Diagnosis and Testing).**

DTC P0715, P0717

1. Fault Code Description

Fault Code	Description	Definition
P0715	Input shaft speed sensor short to power or ground/open circuit	The input shaft speed sensor has connections with the terminal 6 & 16 of the TCM wiring harness connector P32 by the terminal 1 & 2 of the sensor wiring harness connector C26 respectively.
P0717	No input shaft speed sensor signal fault	

2. Possible Sources

Fault Code	Test Tactics	Setting Conditions (Control Strategy)	Fault
P0715	Hardware Circuit Inspection Control signals inspect	• With ignition switch turned to the "ON" position, if TCM receives no pulse signal from input shaft speed sensor for 0.1 s or a longer time continuously and this repeats 10 times.	• Input shaft speed sensor • Circuit • TCM
P0717		• With the communication with TCM normal, gearshift handle in D position and vehicle moving at 20 km/h or a higher speed, if TCM receives no input shaft speed sensor signal but can receive output shaft speed sensor signal and this symptom repeats 500 times.	

3. Diagnosis

Test Conditions	Details/Results/Actions
1. General inspection	
	A. Check if the wiring harness connector C26 of the input shaft speed sensor is reliably secured, becomes loose, dirt or damaged. Is the connection of input shaft speed sensor wiring harness connector normal? **Y** Go to step 2. **N** Disconnect the wiring harness connectors of input shaft speed sensor.
2. Inspect the DTC	
	A. Connect the diagnostic tool. B. Turn the ignition switch to ON position. C. Inspect the AT system with the diagnostic tool. Is there any DTC besides P0715 and P0717? **Y** Carry out the DTC diagnosis. **Refer to: DTC Diagnostic Procedure Index (3.2.1 Automatic Transmission, DTC Diagnosis and Testing).** **N** Go to step 3.
3. Inspect the circuit from input shaft speed sensor to TCM	

Test Conditions	Details/Results/Actions
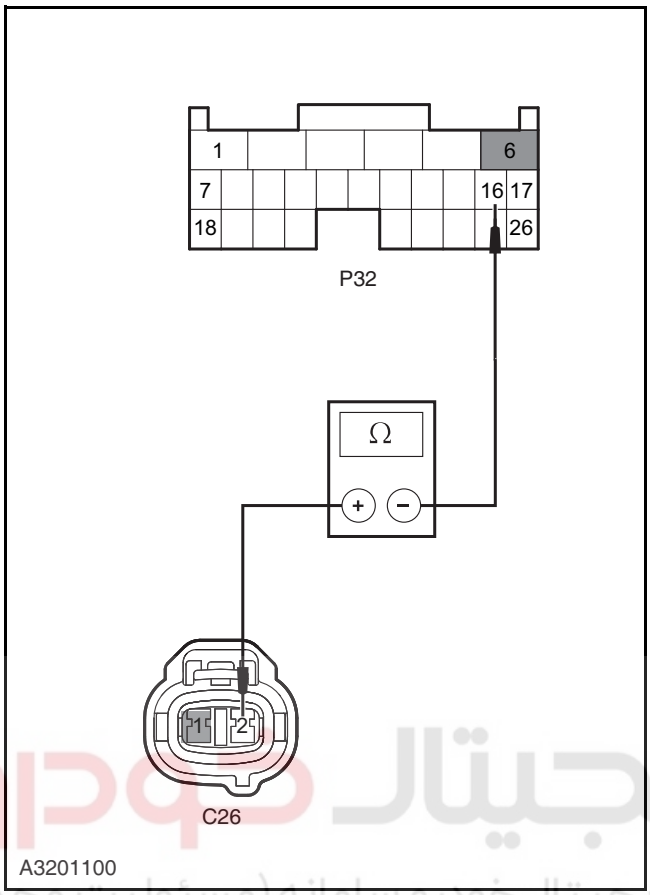	A. Turn the ignition switch to "LOCK" position and disconnect the battery negative cable. B. Disconnect the wiring harness connector C26 of the input shaft speed sensor. C. Disconnect the TCM wiring harness connector P32. D. Connect the battery negative cable. E. Measure the resistance value between the terminal 1 & 2 of the input shaft speed sensor connector C26 and the terminal 6 & 16 of the TCM wiring harness connector P32 respectively. **Standard Resistance Value: less than 5 Ω** F. Measure the resistance value between the terminal 1 & 2 of the input shaft speed sensor connector C26 and the reliable grounding. **Standard Resistance Value: 10 MΩ or more** G. Measure the voltage value between the terminal 1 & 2 of the input shaft speed sensor connector C26 and the reliable grounding. **Standard Voltage Value: 0 V** Are both resistance and voltage values normal? **Y** Go to step 4. **N** Inspect and repair the circuit fault between the terminal 1 & 2 of the input shaft speed sensor connector C26 and the terminal 6 & 16 of the TCM wiring harness connector P32 respectively.
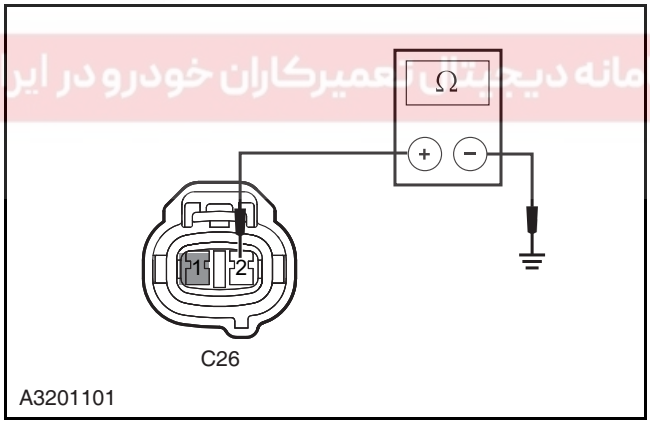	
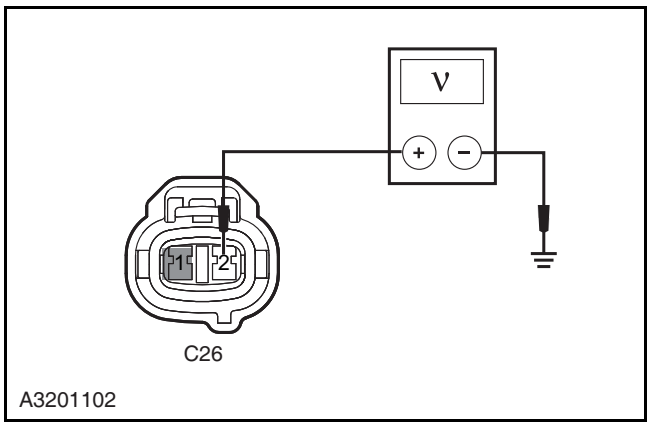	

Test Conditions	Details/Results/Actions
4. Inspect the input shaft speed sensor	
	A. Inspect the input shaft speed sensor. **Refer to: Input Shaft Speed Sensor (NC2) Inspection (3.2.1 Automatic Transmission, General Procedures).** Is the input shaft speed sensor normal? **Y** GO to step 5. **N** Remove the input shaft speed sensor. **Refer to: Input Shaft Speed Sensor (3.2.1 Automatic Transmission, Removal and Installation).**
5. Inspect the TCM power supply circuit	
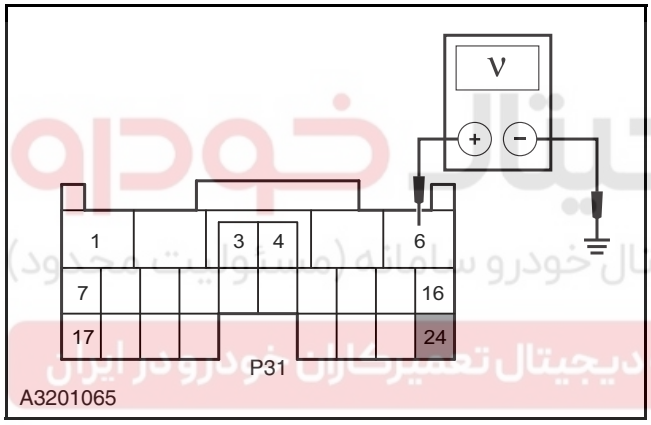	A. Turn the ignition switch to position "LOCK" and disconnect the battery negative cable. B. Disconnect the TCM wiring harness connector P31. C. Connect the battery negative cable. D. Turn the ignition switch to position "ON". E. Measure the voltage between the terminal 6 and 24 of the TCM wiring harness connector P31 and the reliable grounding. **Standard Voltage Value: 11 ~ 14 V** Is the circuit normal? **Y** Go to step 6. **N** Inspect and repair the open circuit fault between the terminal 6 of the TCM wiring harness connector P31 and the terminal 19 of the fuse EF10 of the engine compartment fuse and relay box C01. Inspect and repair the open circuit fault between the terminal 24 of the TCM wiring harness connector P31 and the terminal 7 of the fuse IF04 in the I/P fuse and relay box P01.

Test Conditions	Details/Results/Actions
6. Inspect the TCM ground circuit	
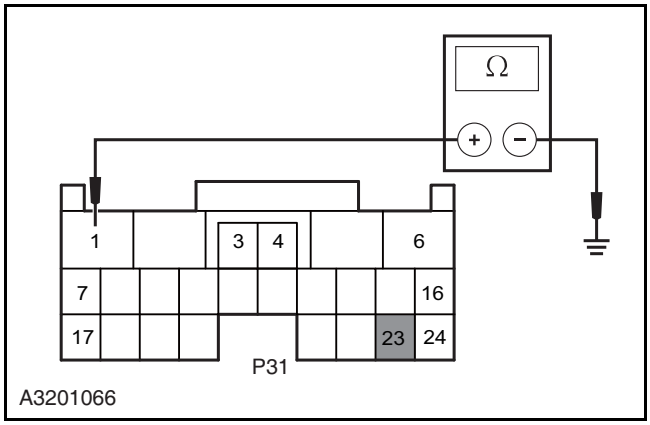	A. Turn the ignition switch to position "LOCK" and disconnect the battery negative cable. B. Disconnect the TCM wiring harness connector P31. C. Measure the resistance between the terminal 1 and 23 of the TCM wiring harness connector P31 and the reliable grounding. **Standard Resistance Value: less than 5 Ω** Is the resistance value normal? **Y** Go to step 7. **N** Inspect and repair the open circuit fault between the TCM wiring harness connector P31 terminal 1 and 23 and the grounding point G104. Verify the system is normal.
7. Inspect the TCM	
	A. Remove the TCM. B. Install the faulted TCM in the vehicle of the same configuration in good condition. Is the vehicle normal after installing the TCM? **Y** Replace the TCM. **Refer to: TCM (3.2.1 Automatic Transmission, Removal and Installation).** **N** Intermittent fault. **Refer to: Intermittent Fault Diagnosis (3.1.13 Electrical Control System - ME7, Symptom Diagnosis and Testing).**

DTC P0720, P0722

1. Fault Code Description

Fault Code	Description	Definition
P0720	Output shaft speed sensor short to power or ground/open circuit	The output shaft speed sensor has connections with the terminal 5 & 14 of the TCM wiring harness connector P32 by the terminal 1 & 2 of the sensor wiring harness connector C27 respectively.
P0722	No output shaft speed sensor signal	

2. Possible Sources

Fault Code	Test Tactics	Setting Conditions (Control Strategy)	Fault
P0720	Hardware Circuit Inspection Control signals inspect	• With ignition switch turned to the "ON" position, if TCM receives no pulse signal from output shaft speed sensor for 0.1 s or a longer time continuously and this occurred 10 times consecutively.	• Output Shaft Speed Sensor • Circuit • TCM
P0722		• With the communication with TCM normal, gearshift handle in D position and vehicle moving at 20km/h or a higher speed, if TCM receives no output shaft speed sensor signal but can receive input shaft speed sensor signal, and this symptom occurred 500 times consecutively.	

3. Diagnosis

Test Conditions	Details/Results/Actions
1. General inspection	
	A. Check if the wiring harness connector C27 of the output shaft speed sensor is reliably secured without dropping, dirt or damaged. If the connection of the output shaft speed sensor wiring harness connector normal? **Y** Go to step 2. **N** Repair the wiring harness connector of the output shaft speed sensor.
2. Inspect the DTC	
	A. Connect the diagnostic tool. B. Turn the ignition switch to "ON" position. C. Inspect the AT system with the diagnostic tool. Is there any other fault code except for P0720 and P0722? **Y** Carry out the DTC diagnosis. **Refer to: DTC Diagnostic Procedure Index (3.2.1 Automatic Transmission, DTC Diagnosis and Testing).** **N** Go to step 3.
3. Inspect the circuit between output shaft speed sensor and TCM	

Test Conditions	Details/Results/Actions
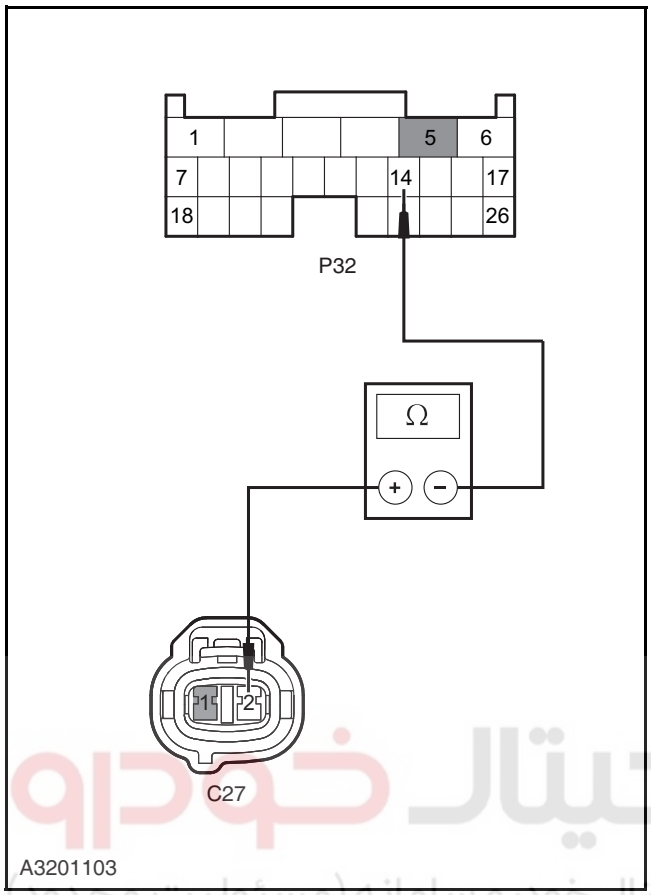	A. Turn the ignition switch to "LOCK" position and disconnect the battery negative cable. B. Disconnect the output shaft speed sensor C27. C. Disconnect the TCM wiring harness connector P32. D. Connect the battery negative cable. E. Measure the resistance value between the terminal 1 & 2 of the output shaft speed sensor connector C27 and the terminal 5 & 14 of the TCM wiring harness connector P32 respectively. **Standard Resistance Value: less than 5 Ω** F. Measure the resistance value between the terminal 1 and 2 of the output shaft speed sensor C27 and the reliable grounding. **Standard Resistance Value: 10 MΩ or more** G. Measure the voltage value between the terminal 1 & 2 of the output shaft speed sensor connector C27 and the reliable grounding. **Standard Voltage Value: 0 V** Are both resistance and voltage values normal? **Y** Go to step 4. **N** Inspect and repair the circuit fault between the terminal 1 & 2 of the output shaft speed sensor wiring harness connector C27 to the terminal 5 & 14 of the TCM wiring harness connector P32 respectively.
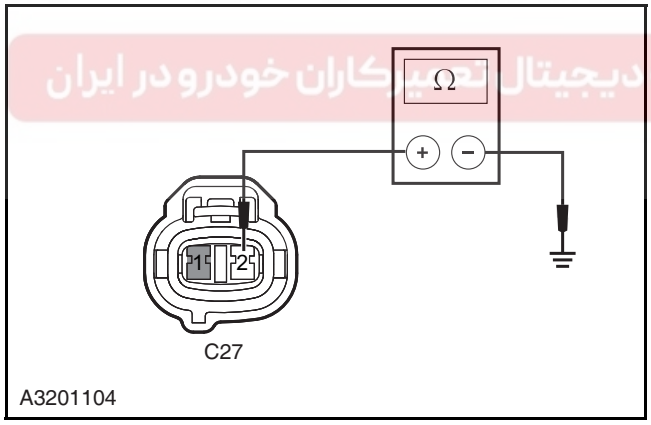	
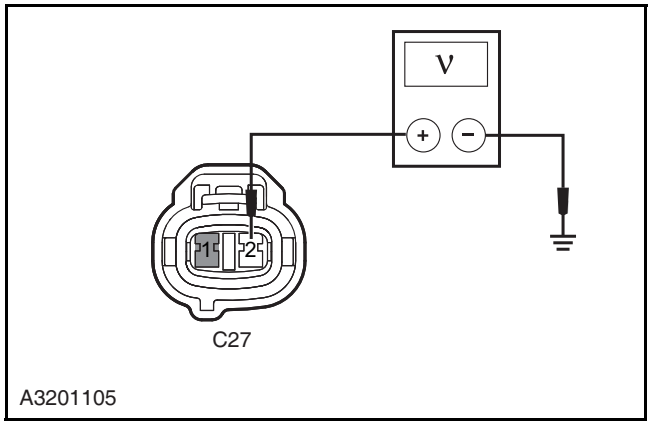	

Test Conditions	Details/Results/Actions
4. Inspect the output shaft speed sensor	
	A. Inspect the output shaft speed sensor. **Refer to: Output Shaft Speed Sensor (SP) Inspection (3.2.1 Automatic Transmission, General Procedures).** Is the output shaft speed sensor normal? **Y** Go to step 5. **N** Replace the output shaft speed sensor. **Refer to: Output Shaft Speed Sensor (3.2.1 Automatic Transmission, Removal and Installation).**
5. Inspect the TCM power supply circuit	
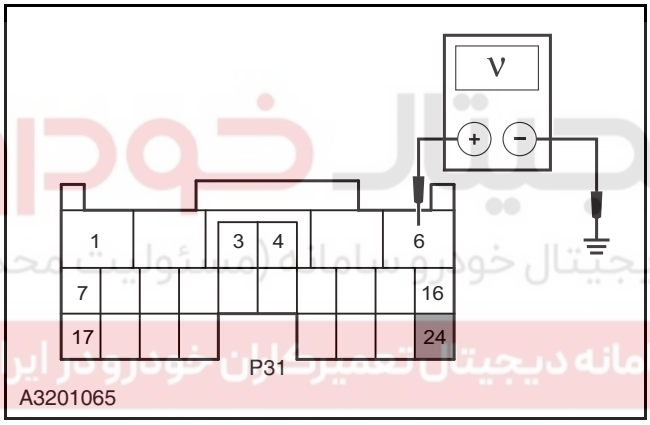	A. Turn the ignition switch to position "LOCK" and disconnect the battery negative cable. B. Disconnect the TCM wiring harness connector P31. C. Connect the battery negative cable. D. Turn the ignition switch to position "ON". E. Measure the voltage between the terminal 6 and 24 of the TCM wiring harness connector P31 and the reliable grounding. **Standard Voltage Value: 11 ~ 14 V** Is the circuit normal? **Y** Go to step 6. **N** Inspect and repair the open circuit fault between the terminal 6 of the TCM wiring harness connector P31 and the terminal 19 of the fuse EF10 of the engine compartment fuse and relay box C01. Inspect and repair the open circuit fault between the terminal 24 of the TCM wiring harness connector P31 and the terminal 7 of the fuse IF04 in the I/P fuse and relay box P01.

Test Conditions	Details/Results/Actions
6. Inspect the TCM ground circuit	
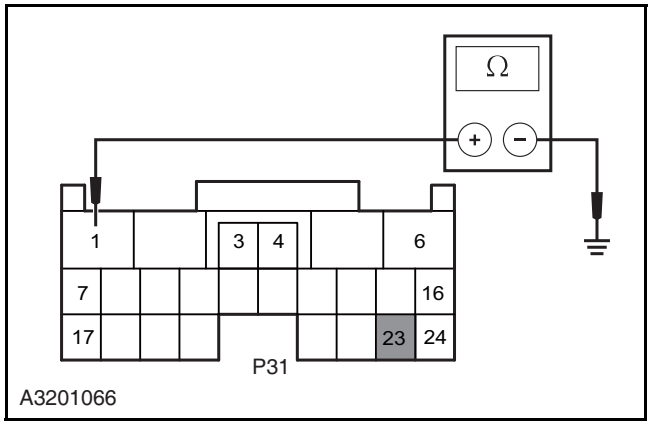	A. Turn the ignition switch to position "LOCK" and disconnect the battery negative cable. B. Disconnect the TCM wiring harness connector P31. C. Measure the resistance between the terminal 1 and 23 of the TCM wiring harness connector P31 and the reliable grounding. **Standard Resistance Value: less than 5 Ω** Is the resistance value normal? **Y** Go to step 7. **N** Inspect and repair the open circuit fault between the TCM wiring harness connector P31 terminal 1 and 23 and the grounding point G104. Verify the system is normal.
7. Inspect the TCM	
	A. Remove the TCM. B. Install the faulted TCM in the vehicle of the same configuration in good condition. Is the vehicle normal after installing the TCM? **Y** Replace the TCM. **Refer to: TCM (3.2.1 Automatic Transmission, Removal and Installation).** **N** Intermittent fault. **Refer to: Intermittent Fault Diagnosis (3.1.13 Electrical Control System - ME7, Symptom Diagnosis and Testing).**

DTC P0731

1. Fault Code Description

Fault Code	Description	Definition
P0731	No engine brake	C1 solenoid pressure lowest or C2 solenoid pressure lowest or lockup solenoid pressure lowest

2. Possible Sources

Fault Code	Test Tactics	Setting Conditions (Control Strategy)	Fault
P0731	Hardware and circuit inspection	• With the gearshift handle in D position and the vehicle driving, the engine brake is abnormal in the 1st gear and this symptom occurred 5 times.	• Circuit • Solenoid valve • TCM

3. Diagnosis

Test Conditions	Details/Results/Actions
1. General inspection	
	A. Inspect the related wiring harness connector for signs of damage, poor contact, aging or loose. Is it normal? **Y** Go to step 2. **N** Repair the fault.
2. Eliminate the fault code	
	A. Connect the diagnostic tool. B. Use diagnostic tool to delete DTC. C. Swing, pull and press the diagnosis joint DLC, engine control module ECM and vehicle body control module BCM wiring harness connector. D. Use the diagnostic tool to redo the diagnosis for DTC. Is there DTC P0731? **Y** Go to step 3. **N** Intermittent fault. **Refer to: Intermittent Fault Diagnosis (3.1.13 Electrical Control System - ME7, Symptom Diagnosis and Testing).**

Test Conditions	Details/Results/Actions
3. Inspect the solenoids and circuits	
	A. Inspect the relevant solenoids and circuits. **Refer to: DTC P0761, P0762, P0978, P0979, P0980 (3.2.1 Automatic Transmission, DTC Diagnosis and Testing).** **Refer to: DTC P0766, P0767, P0981, P0982, P0983 (3.2.1 Automatic Transmission, DTC Diagnosis and Testing).** **Refer to: DTC P0741, P0742, P2762, P2763, P2764 (3.2.1 Automatic Transmission, DTC Diagnosis and Testing).**

DTC P0741, P0742, P2762, P2763, P2764

1. Fault Code Description

Fault Code	Description	Definition
P0741	Lockup solenoid [SLU] off holding	The lockup solenoid has connections with the terminal 3 & 9 of the automatic transmission wiring harness connector C28 by the terminal 5 & 3 of the TCM wiring harness connector P31 respectively.
P0742	Lockup solenoid [SLU] closure holding	
P2762	Lockup solenoid [SLU] feedback current holding	
P2763	Lockup solenoid [SLU] short to power	
P2764	Lockup solenoid [SLU] short to ground or open circuit	

2. Possible Sources

Fault Code	Test Tactics	Setting Conditions (Control Strategy)	Fault
P0741	Performance inspection Hardware and circuit inspection	• With the gearshift handle in D position, the vehicle moving and hydraulic torque converter lockup activated, if TCM detects the difference between engine speed and turbine speed greater than 100 rpm and this symptom lasts 2 s or longer and occurred 6 times consecutively.	• Circuit • Lockup solenoid • TCM
P0742		• With the gearshift handle in D position, the vehicle moving, hydraulic torque converter lockup and slip difference control inactive, if TCM detects the difference between engine speed and turbine speed less than 30 rpm and this symptom lasts 2 s or longer and occurred 2 times consecutively.	
P2762		• With the ignition switch turned to the "ON" position, if TCM detects SLU solenoid feedback current error and this symptom lasts 3 s or longer.	
P2763		• With the ignition switch turned to the "ON" position, if TCM detects SLU solenoid feedback current error and this symptom lasts 0.1 s or longer and occurred 5 times.	
P2764		• With the ignition switch turned to the "ON" position, if TCM detects SLU solenoid feedback current error and this symptom lasts 0.1 s or longer and occurred 5 times.	

3. Diagnosis

Test Conditions	Details/Results/Actions
1. Inspect the DTC	
	A. Connect the diagnostic tool. B. Diagnose the automatic transmission with the diagnostic tool. Is there any DTC other than P0741, P0742, P2762, P2763 and P2764? **Y** Carry out the DTC diagnosis. **Refer to: DTC Diagnostic Procedure Index (3.2.1 Automatic Transmission, DTC Diagnosis and Testing).** **N** Go to step 2.
2. Inspect the control signal voltage of lockup solenoid	
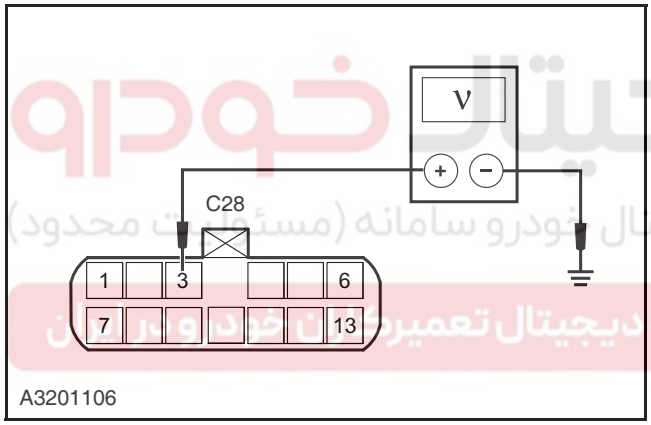	A. Connect the diagnostic tool. B. Turn the ignition switch to "ON" position. C. Execute the active test of the automatic transmission with diagnostic tool, execute the menu "lockup solenoid ST-OFF". D. Measure with the multimeter the voltage between the terminal 3 of the automatic transmission wiring harness connector C28 and the reliable grounding. **Standard Voltage Value: 0 V** E. Execute the active test of the automatic transmission with diagnostic tool, execute the menu "lockup solenoid current-ON". F. Measure with the multimeter the voltage between the terminal 3 of the automatic transmission wiring harness connector C28 and the reliable grounding. **Standard Voltage Value: 11 ~ 14 V** Is the voltage normal? **Y** Go to step 4. **N** Go to step 3.

Test Conditions	Details/Results/Actions
3. Inspect the circuit between the solenoid and TCM	
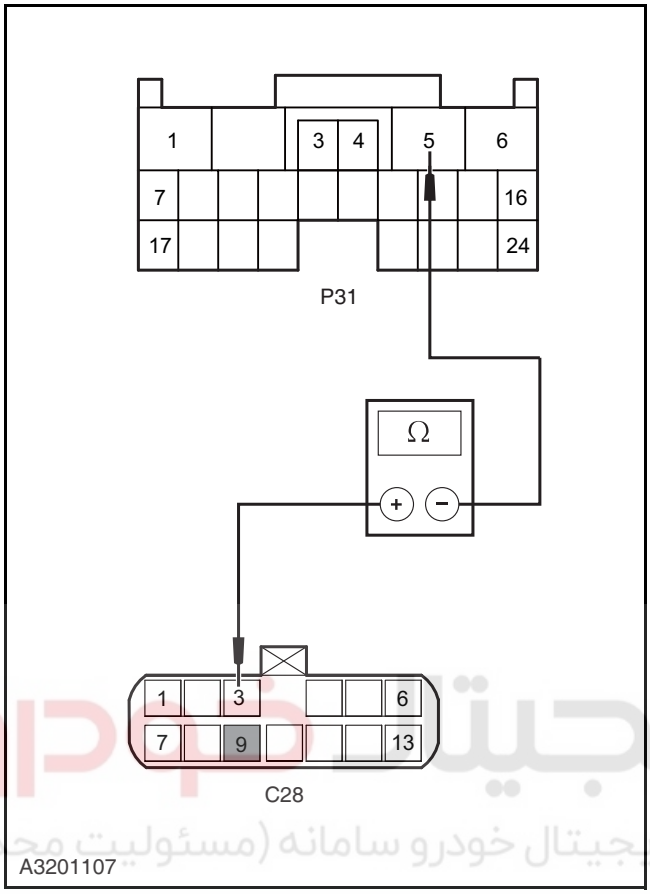	A. Turn the ignition switch to position "LOCK". B. Disconnect the automatic transmission wiring harness connector C28. C. Disconnect the TCM wiring harness connector P31. D. Measure the resistance value between the terminal 3 & 9 of the automatic transmission wiring harness connector C28 and the terminal 5 & 3 of the TCM wiring harness connector P31 respectively. **Standard Resistance Value: less than 5 Ω** E. Measure the resistance value between the terminal 3 and 9 of the automatic transmission wiring harness connector C28 and the reliable grounding. **Standard Resistance Value: 10 MΩ or more** F. Measure the voltage value between the terminal 3 and 9 of the auto transmission wiring harness connector C28 and the reliable grounding. **Standard Voltage Value: 0 V** Are both resistance and voltage values normal? **Y** Go to step 4. **N** Inspect and repair the circuit fault between the terminal 3 & 9 of the automatic transmission wiring harness connector C28 and the terminal 5 & 3 of the TCM wiring harness connector P31 respectively.
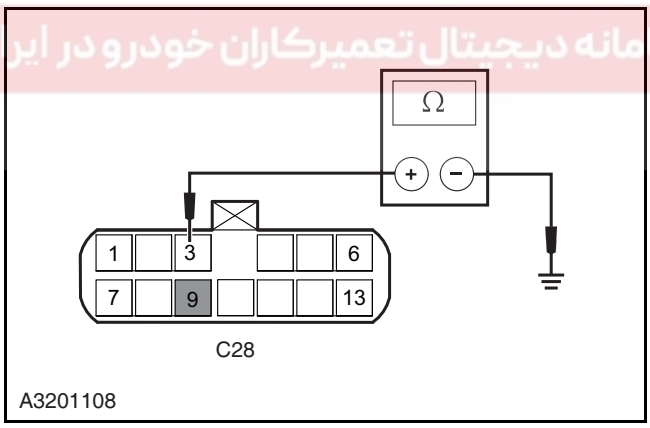	
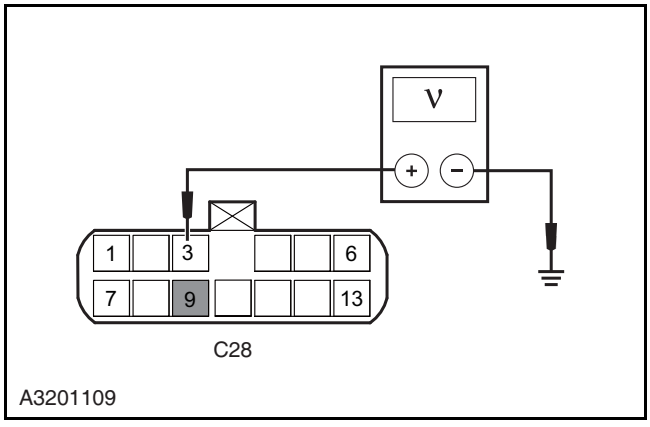	

Test Conditions	Details/Results/Actions
4. Inspect the lockup solenoid	
	A. Inspect the lockup solenoid. **Refer to: Lockup Solenoid (SLU) Inspection (3.2.1 Automatic Transmission, General Procedures).** Is the lockup solenoid normal? **Y** Go to step 5. **N** Replace the lockup solenoid.
5. Inspect the TCM power supply circuit	
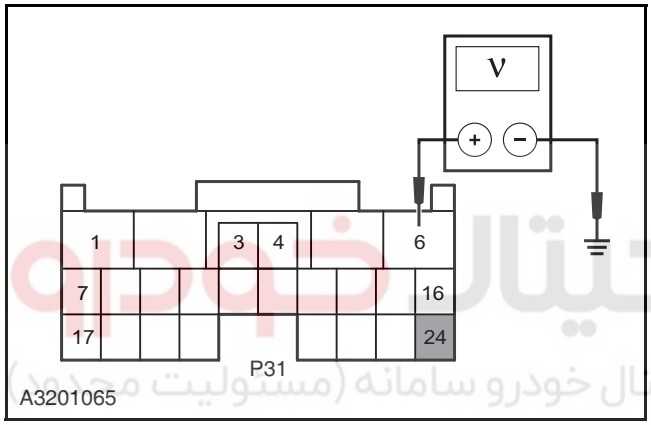	A. Turn the ignition switch to position "LOCK" and disconnect the battery negative cable. B. Disconnect the TCM wiring harness connector P31. C. Connect the battery negative cable. D. Turn the ignition switch to position "ON". E. Measure the voltage between the terminal 6 and 24 of the TCM wiring harness connector P31 and the reliable grounding. **Standard Voltage Value: 11 ~ 14 V** Is the circuit normal? **Y** Go to step 6. **N** Inspect and repair the open circuit fault between the terminal 6 of the TCM wiring harness connector P31 and the terminal 19 of the fuse EF10 of the engine compartment fuse and relay box C01. Inspect and repair the open circuit fault between the terminal 24 of the TCM wiring harness connector P31 and the terminal 7 of the fuse IF04 in the I/P fuse and relay box P01.

Test Conditions	Details/Results/Actions
6. Inspect the TCM ground circuit	
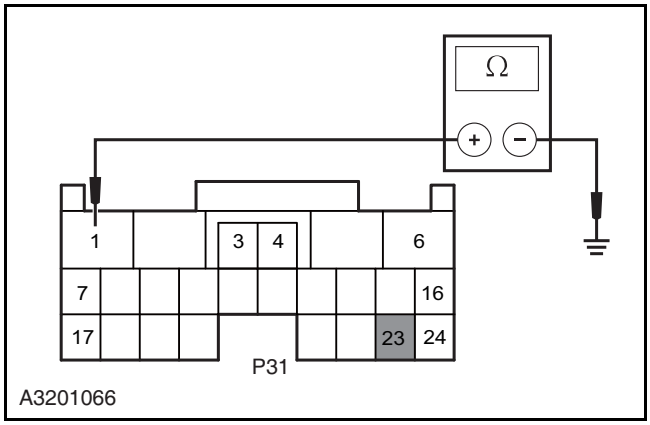	A. Turn the ignition switch to position "LOCK" and disconnect the battery negative cable. B. Disconnect the TCM wiring harness connector P31. C. Measure the resistance between the terminal 1 and 23 of the TCM wiring harness connector P31 and the reliable grounding. **Standard Resistance Value: less than 5 Ω** Is the resistance value normal? **Y** Go to step 7. **N** Inspect and repair the open circuit fault between the TCM wiring harness connector P31 terminal 1 and 23 and the grounding point G104. Verify the system is normal.
7. Inspect the TCM	
	A. Remove the TCM. B. Install the faulted TCM in the vehicle of the same configuration in good condition. Is the vehicle normal after installing the TCM? **Y** Replace the TCM. **Refer to: TCM (3.2.1 Automatic Transmission, Removal and Installation).** **N** Intermittent fault. **Refer to: Intermittent Fault Diagnosis (3.1.13 Electrical Control System - ME7, Symptom Diagnosis and Testing).**

DTC P0741, P0751, P0766, P0973, P0974

1. Fault Code Description

Fault Code	Description	Definition
P0741	Shift solenoid (S1) max. pressure holding	The gearshift solenoid has connects with the terminal 16 on the TCM wiring harness connector P31 through the terminal 10 of the automatic transmission wiring harness connector C28. The solenoid can ground by itself.
P0751	Shift solenoid (S1) min. pressure holding	
P0766	Shift solenoid (S1) max. pressure holding	
P0973	Shift solenoid (S1) short to power/open circuit	
P0974	Shift solenoid (S1) short to ground	

2. Possible Sources

Fault Code	Test Tactics	Setting Conditions (Control Strategy)	Fault
P0741	Performance inspection Hardware and circuit inspection	• With the gearshift handle in D position, the vehicle moving and the hydraulic torque converter lockup activated, if TCM detects the difference between engine speed and turbine speed less than 100 rpm and this symptom lasts 2 s or longer and occurred 6 times consecutively.	• Solenoid valve circuit • Solenoid valve • Transmission assembly
P0751		• With the gearshift handle in D position and the vehicle moving, if TCM detects the engine brake in the 1st gear abnormal and this symptom occurred 5 times.	
P0766		• With the gearshift handle in D position and the vehicle moving, if TCM detects the gear ratio in the 3rd or 4th gear abnormal and this symptom occurred 5 times.	
P0973		• With the ignition switch turned to "ON" and the vehicle stopped, if TCM detects S1 short to ground and this symptom lasts 0.1 s or longer and occurred 5 times.	
P0974		• With the ignition switch turned to "ON" and the vehicle running, if TCM detects S1 open circuit or short to +B and this symptom lasts 0.1 s or longer and occurred 5 times.	

3. Diagnosis

Test Conditions	Details/Results/Actions
1. Inspect the DTC	
	A. Connect the diagnostic tool. B. Diagnose the automatic transmission with the diagnostic tool. Is there any DTC other than P0741, P0751, P0766, P0973 and P0974 ? **Y** Carry out the DTC diagnosis. **Refer to: DTC Diagnostic Procedure Index (3.2.1 Automatic Transmission, DTC Diagnosis and Testing).** **N** Go to step 2.
2. Inspect the control signal voltage of the gear shift solenoid	
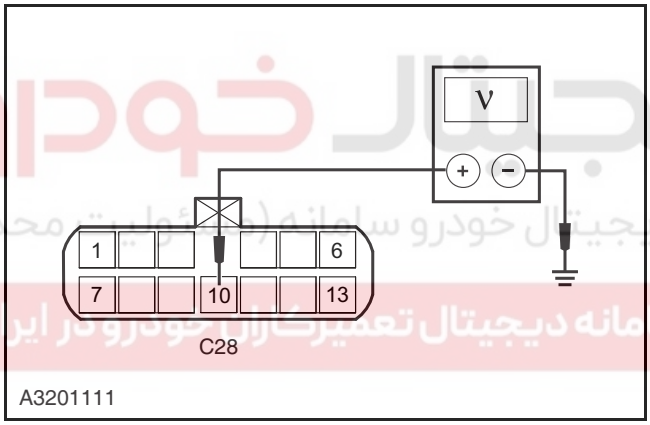	A. Connect the diagnostic tool. B. Turn the ignition switch to "ON" position. C. Use the diagnostic tool to execute initiative automatic transmission testing, execute "gearshift solenoid S1-off". D. Measure the voltage between the terminal 10 of the automatic transmission wiring harness connector C28 and the reliable grounding with the multimeter. **Standard Voltage Value: 0 V** E. Execute the active test of the automatic transmission with diagnostic tool, execute the menu "Gearshift solenoid S1-ON". F. Measure the voltage between the terminal 10 of the automatic transmission wiring harness connector C28 and the reliable grounding with the multimeter. **Standard Voltage Value: 11 ~ 14 V** Is the voltage normal? **Y** Intermittent fault. **Refer to: Intermittent Fault Diagnosis (3.1.13 Electrical Control System - ME7, Symptom Diagnosis and Testing).** **N** Go to step 3.
3. Inspect the circuit of the gear shift solenoid	

Test Conditions	Details/Results/Actions
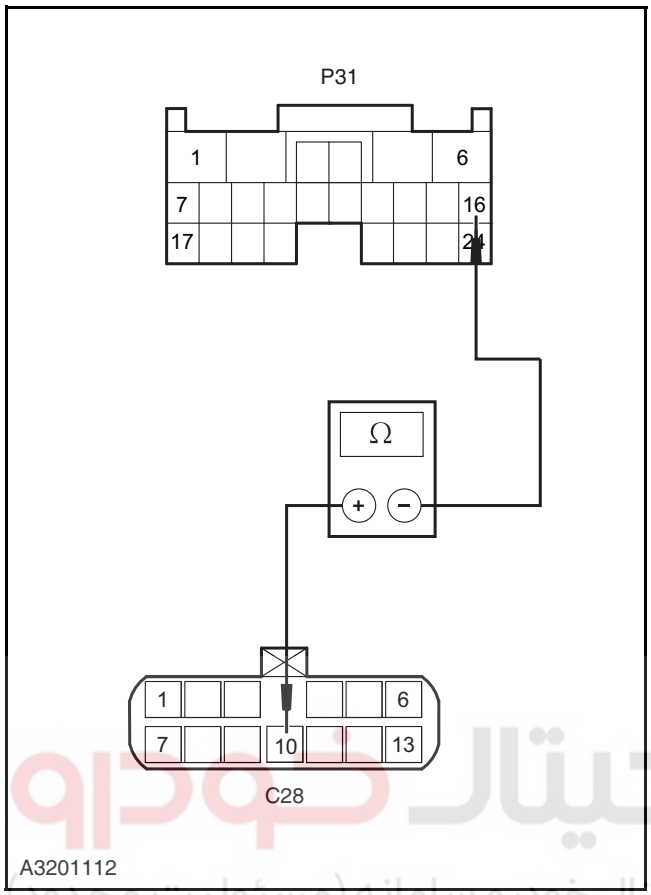	A. Turn the ignition switch to position "LOCK" and disconnect the battery negative cable. B. Disconnect the automatic transmission wiring harness connector C28. C. Disconnect the TCM wiring harness connector P31. D. Connect the battery negative cable. E. Measure the resistance value between the terminal 10 of the automatic transmission wiring harness connector C28 and the terminal 16 of the TCM wiring harness connector P31, Inspect if the circuit is open. **Standard Resistance Value: less than 5 Ω** F. Measure the resistance between Terminal 10 of wiring harness connector C31 in Automatic Transmission and grounding, inspect if there is short circuit to ground. **Standard Resistance Value: 10 MΩ or more** G. Measure the voltage between Terminal 10 of wiring harness connector C31 in Automatic Transmission and grounding, inspect if there is short circuit to the power. **Standard Voltage Value: 0 V** Is the circuit normal? **Y** Go to step 4. **N** Repair the circuit fault between the terminal 10 of the automatic transmission wiring harness connector C28 and the terminal 16 of the TCM wiring harness connector P31.
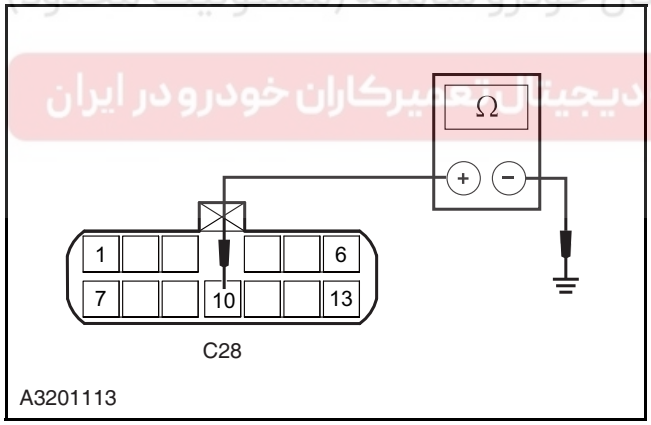	
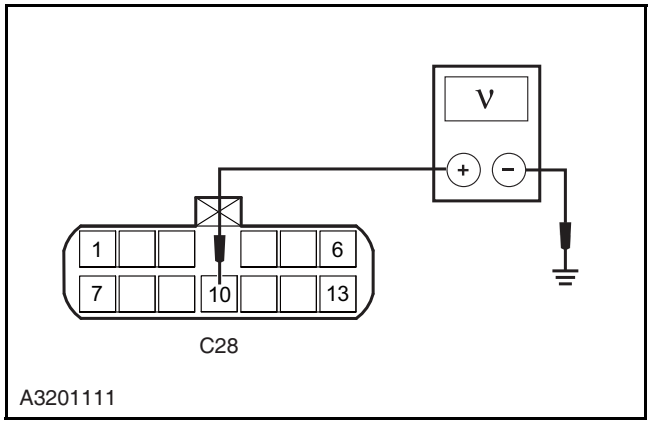	

Test Conditions	Details/Results/Actions
4. Inspect the gearshift solenoid	
	A. Inspect the gearshift solenoid. **Refer to: Gear Shift Solenoid (S1) Inspection (3.2.1 Automatic Transmission, General Procedures).** Is the shift solenoid normal? **Y** Go to step 5. **N** Replace the gear shifting solenoid.
5. Inspect the TCM power supply circuit	
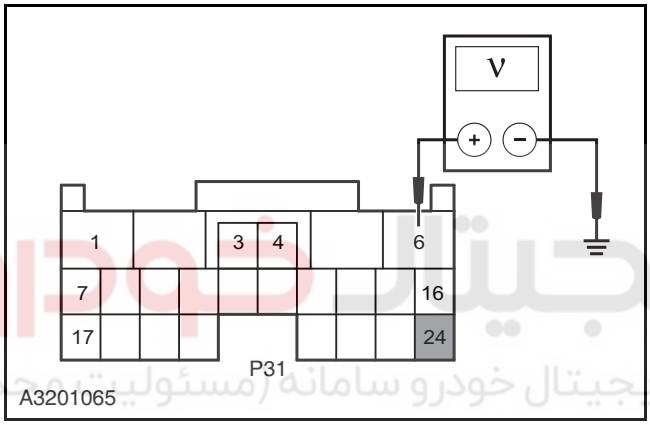	A. Turn the ignition switch to position "LOCK" and disconnect the battery negative cable. B. Disconnect the TCM wiring harness connector P31. C. Connect the battery negative cable. D. Turn the ignition switch to position "ON". E. Measure the voltage between the terminal 6 and 24 of the TCM wiring harness connector P31 and the reliable grounding. **Standard Voltage Value: 11 ~ 14 V** Is the circuit normal? **Y** Go to step 6. **N** Inspect and repair the open circuit fault between the terminal 6 of the TCM wiring harness connector P31 and the terminal 19 of the fuse EF10 of the engine compartment fuse and relay box C01. Inspect and repair the open circuit fault between the terminal 24 of the TCM wiring harness connector P31 and the terminal 7 of the fuse IF04 in the I/P fuse and relay box P01.

Test Conditions	Details/Results/Actions
6. Inspect the TCM ground circuit	
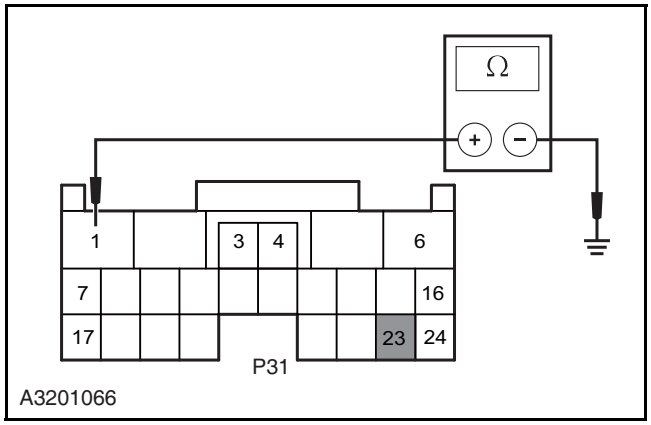	A. Turn the ignition switch to position "LOCK" and disconnect the battery negative cable. B. Disconnect the TCM wiring harness connector P31. C. Measure the resistance between the terminal 1 and 23 of the TCM wiring harness connector P31 and the reliable grounding. **Standard Resistance Value: less than 5 Ω** Is the resistance value normal? **Y** Go to step 7. **N** Inspect and repair the open circuit fault between the TCM wiring harness connector P31 terminal 1 and 23 and the grounding point G104. Verify the system is normal.
7. Inspect the TCM	
	A. Remove the TCM. B. Install the faulted TCM in the vehicle of the same configuration in good condition. Is the vehicle normal after installing the TCM? **Y** Replace the TCM. **Refer to: TCM (3.2.1 Automatic Transmission, Removal and Installation).** **N** Intermittent fault. **Refer to: Intermittent Fault Diagnosis (3.1.13 Electrical Control System - ME7, Symptom Diagnosis and Testing).**

DTC P0761, P0762, P0978, P0979, P0980

1. Fault Code Description

Fault Code	Description	Definition
P0761	C1 shift control solenoid [SLC1] min. pressure holding	The C1 gearshift control solenoid has connections with the terminal 22 & 9 of the TCM wiring harness connector P31 by the terminal 6 & 13 of the automatic transmission wiring harness connector C28 respectively.
P0762	C1 shift control solenoid [SLC1] max. pressure holding	
P0978	C1 pressure control solenoid [SLC1] feedback current holding	
P0979	C1 shift control solenoid [SLC1] short to ground/ open circuit	
P0980	C1 shift control solenoid [SLC1] short to power	

2. Possible Sources

Fault Code	Test Tactics	Setting Conditions (Control Strategy)	Fault
P0761	Performance inspection Hardware and circuit inspection	• With the gearshift handle in D position, accelerator pedal not pressed and the vehicle stopped, the vehicle does not can not be driven (the 1st gear ratio is improper) and this symptom lasts 3.3 s or longer and occurred twice. • With the gearshift handle in D position and the vehicle moving, the 3rd or 4th gear ratio is improper and this symptom lasts 1 s or longer and occurred 5 times.	• Solenoid valve circuit • Solenoid valve • Transmission assembly
P0762		• With the gearshift handle in D position and the vehicle moving, the gear shift from 2nd to 4th or from 2nd to 3rd is abnormal or the 4th gear ratio is improper and this symptom occurred 5 times.	
P0978		• With the ignition switch turned to the "ON" position, a solenoid feedback current error is detected and this symptom lasts 3 s or longer.	
P0979		• With the ignition switch turned to the "ON" position, a solenoid feedback current error is detected and this symptom lasts 3 s or longer and occurred 5 times.	
P0980		• With the ignition switch turned to the "ON" position, a solenoid feedback current error is detected and this symptom lasts 3 s or longer and occurred 5 times.	

3. Diagnosis

Test Conditions	Details/Results/Actions
1. Inspect the DTC	
	A. Connect the diagnostic tool. B. Diagnose the automatic transmission with the diagnostic tool. Exist fault codes besides P0761, P0762, P0978, P0979, P0980 or not? **Y** Carry out the DTC diagnosis. **Refer to: DTC Diagnostic Procedure Index (3.2.1 Automatic Transmission, DTC Diagnosis and Testing).** **N** Go to step 2.
2. Inspect the control signal voltage of the gearshift solenoid C1	
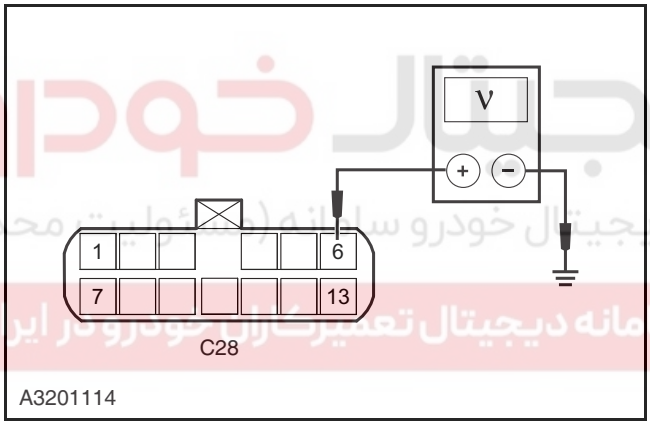	A. Connect the diagnostic tool. B. Turn the ignition switch to "ON" position. C. Execute the active test of the automatic transmission with diagnostic tool, execute the menu "C1 solenoid current-OFF". D. Measure with the multimeter the voltage between the terminal 6 of the automatic transmission wiring harness connector C28 and the reliable grounding. **Standard Voltage Value: 0 V** E. Execute the active test of automatic transmission with diagnostic tool, execute the menu "C1 solenoid current-ON". F. Measure with the multimeter the voltage between the terminal 6 of the automatic transmission wiring harness connector C28 and the reliable grounding. **Standard Voltage Value: 11 ~ 14 V** Is the voltage normal? **Y** Intermittent fault. **Refer to: Intermittent Fault Diagnosis (3.1.13 Electrical Control System - ME7, Symptom Diagnosis and Testing).** **N** Go to step 3.

Test Conditions	Details/Results/Actions
3. Inspect the circuit from C1 shift control solenoid to TCM	
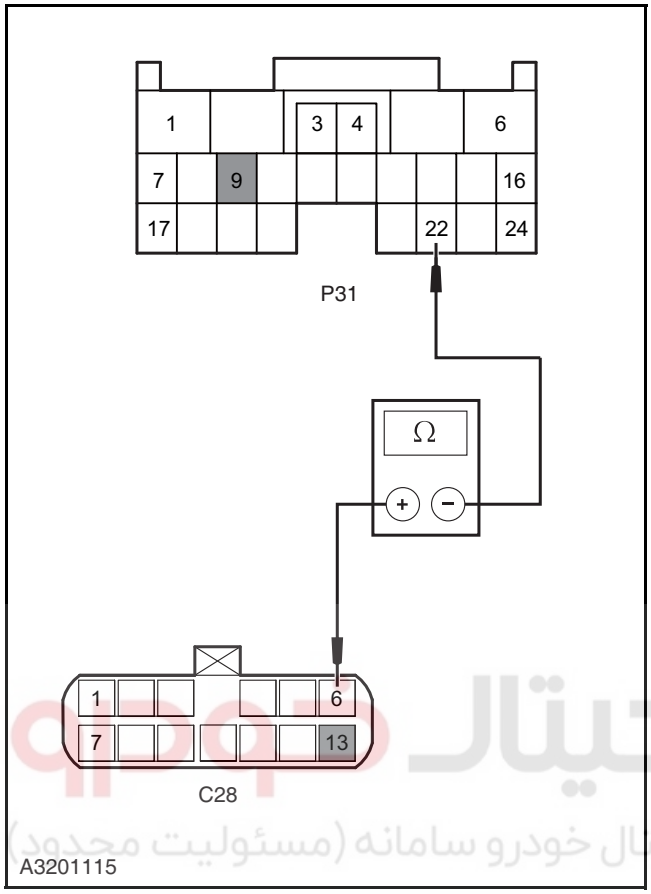	A. Turn the ignition switch to position "LOCK" and disconnect the battery negative cable. B. Disconnect the automatic transmission wiring harness connector C28. C. Disconnect the TCM wiring harness connector P31. D. Connect the battery negative cable. E. Measure the resistance value between the terminal 6 and 13 of the auto transmission harness connector C28 and the terminal 22 and 9 of the TCM wiring harness connector P31, inspect if the circuit is open. **Standard Resistance Value: less than 5 Ω** F. Measure the resistance between Terminal 6 and 13 of wiring harness connector C28 in Automatic Transmission and grounding, inspect if there is short circuit to ground. **Standard Resistance Value: 10 MΩ or more** G. Measure the voltage between terminal 6 and 13 of wiring harness connector C28 in Automatic Transmission and grounding, inspect if there is short circuit to the power. **Standard Voltage Value: 0 V** Is the circuit normal? **Y** Go to step 4. **N** Inspect and repair the circuit fault between the terminal 6 & 13 of the automatic transmission wiring harness connector C28 and the terminal 22 & 9 of the TCM wiring harness connector P31 respectively.
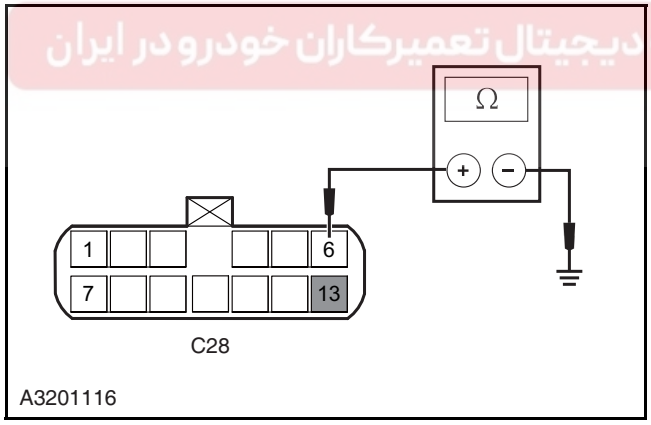	
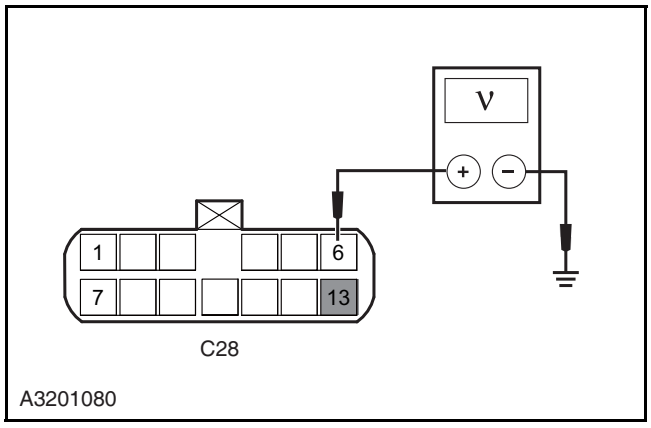	

Test Conditions	Details/Results/Actions
4. Inspect the C1 shift control solenoid	
	A. Inspect the C1 shift control solenoid. **Refer to: Linear Pressure Control Solenoid (SLC1, SLC2, SLB1) Inspection (3.2.1 Automatic Transmission, General Procedures).** If the C1 shift control solenoid normal? **Y** Go to step 5. **N** Replace the C1 shift control solenoid.
5. Inspect the TCM power supply circuit	
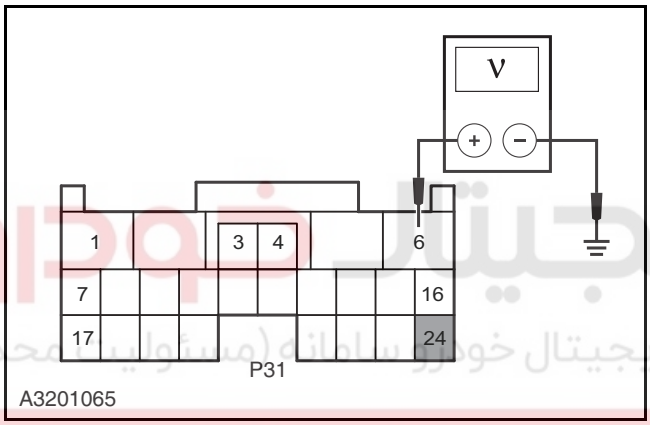	A. Turn the ignition switch to position "LOCK" and disconnect the battery negative cable. B. Disconnect the TCM wiring harness connector P31. C. Connect the battery negative cable. D. Turn the ignition switch to position "ON". E. Measure the voltage between the terminal 6 and 24 of the TCM wiring harness connector P31 and the reliable grounding. **Standard Voltage Value: 11 ~ 14 V** Is the circuit normal? **Y** Go to step 6. **N** Inspect and repair the open circuit fault between the terminal 6 of the TCM wiring harness connector P31 and the terminal 19 of the fuse EF10 of the engine compartment fuse and relay box C01. Inspect and repair the open circuit fault between the terminal 24 of the TCM wiring harness connector P31 and the terminal 7 of the fuse IF04 in the I/P fuse and relay box P01.

Test Conditions	Details/Results/Actions
6. Inspect the TCM ground circuit	
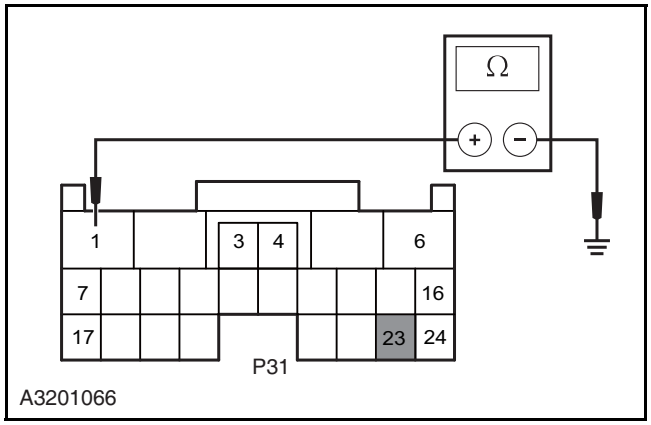	A. Turn the ignition switch to position "LOCK" and disconnect the battery negative cable. B. Disconnect the TCM wiring harness connector P31. C. Measure the resistance between the terminal 1 and 23 of the TCM wiring harness connector P31 and the reliable grounding. **Standard Resistance Value: less than 5 Ω** Is the resistance value normal? **Y** Go to step 7. **N** Inspect and repair the open circuit fault between the TCM wiring harness connector P31 terminal 1 and 23 and the grounding point G104. Verify the system is normal.
7. Inspect the TCM	
	A. Remove the TCM. B. Install the faulted TCM in the vehicle of the same configuration in good condition. Is the vehicle normal after installing the TCM? **Y** Replace the TCM. **Refer to: TCM (3.2.1 Automatic Transmission, Removal and Installation).** **N** Intermittent fault. **Refer to: Intermittent Fault Diagnosis (3.1.13 Electrical Control System - ME7, Symptom Diagnosis and Testing).**

DTC P0766, P076, P0981, P0982, P0983

1. Fault Code Description

Fault Code	Description	Definition
P0766	C2 shift control solenoid [SLC2] min. pressure holding	The C2 gearshift control solenoid has connections with the terminal 21 & 19 of the TCM wiring harness connector P31 by the terminal 5 & 12 of the automatic transmission wiring harness connector C28 respectively.
P0767	C2 shift control solenoid [SLC2] max. pressure holding	
P0981	C2 shift control solenoid [SLC2] feedback current holding	
P0982	C2 pressure control solenoid [SLC2] short to ground/open circuit	
P0983	C2 pressure control solenoid [SLC2] short to power	

2. Possible Sources

Fault Code	Test Tactics	Setting Conditions (Control Strategy)	Fault
P0766	Performance inspection Hardware and circuit inspection	• With the gearshift handle in D position and the vehicle moving, the 3rd or 4th gear ratio is improper and this symptom lasts 1 s or longer and occurred 5 times.	• Circuit • TCM • C2 shift control solenoid • Automatic transmission
P0767		• With the gearshift handle in D position and the vehicle moving, the gear shift from 1st to 2nd, from 3rd to 2nd or from 4th to 2nd is abnormal or the 2nd gear ratio is improper and this symptom occurred 5 times.	
P0981		• With the ignition switch turned to "ON" , a solenoid feedback current error is detected and this symptom lasts 3 s or longer.	
P0982		• With the ignition switch turned to "ON", a solenoid feedback current meters error is detected. This symptom lasts 0.1 s or longer and occurred 5 times.	
P0983		• With the ignition switch turned to "ON", a solenoid feedback current error is detected and this symptom lasts 0.1 s or longer and occurred 5 times.	

3. Diagnosis

Test Conditions	Details/Results/Actions
1. Inspect the DTC	
	A. Connect the diagnostic tool. B. Diagnose the automatic transmission with the diagnostic tool. Is there any DTC other than P0766, P0767, P0981, P0982 and P0983 ? **Y** Carry out the DTC diagnosis. **Refer to: DTC Diagnostic Procedure Index (3.2.1 Automatic Transmission, DTC Diagnosis and Testing).** **N** Go to step 2.
2. Inspect the control signal voltage of the gearshift solenoid C2	
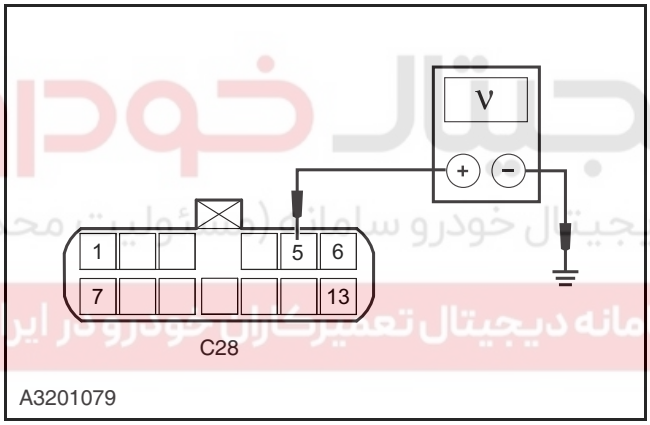	A. Connect the diagnostic tool. B. Turn the ignition switch to "ON" position. C. Execute the active test of the automatic transmission with the diagnostic tool, execute the menu "C2 solenoid current-OFF". D. Measure with the multimeter the voltage between the terminal 5 of the automatic transmission wiring harness connector C28 and the reliable grounding. **Standard Voltage Value: 0 V** E. Execute the active test of the automatic transmission with diagnostic tool, execute the menu "C2 solenoid current-ON". F. Measure with the multimeter the voltage between the terminal 5 of the automatic transmission wiring harness connector C28 and the reliable grounding. **Standard Voltage Value: 11 ~ 14 V** Is the voltage normal? **Y** Intermittent fault. **Refer to: Intermittent Fault Diagnosis (3.1.13 Electrical Control System - ME7, Symptom Diagnosis and Testing).** **N** Go to step 3.
3. Inspect the circuit from C2 shift control solenoid to TCM	

Test Conditions	Details/Results/Actions
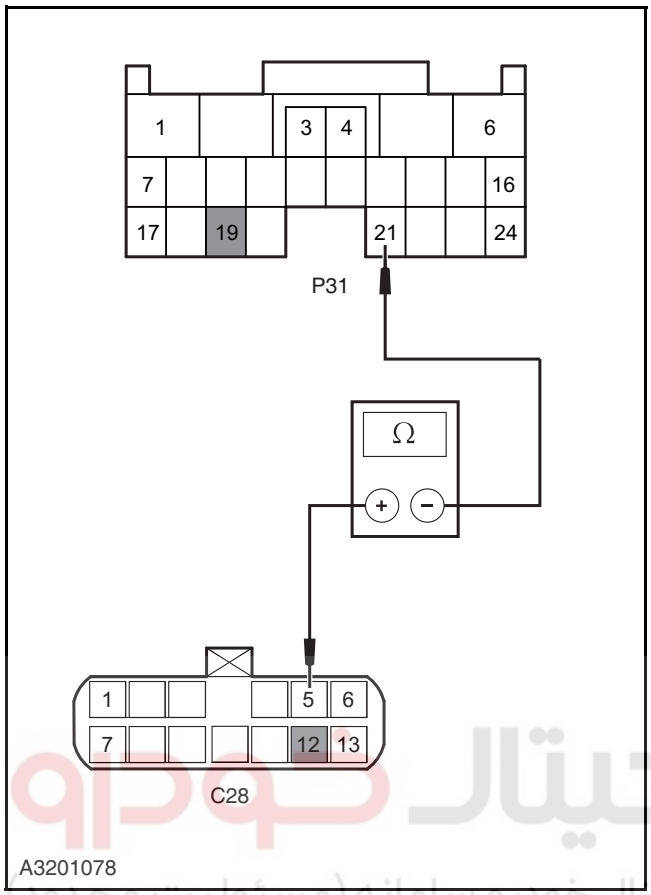 A3201078	A. Turn the ignition switch to position "LOCK" and disconnect the battery negative cable. B. Disconnect the TCM wiring harness connector P31. C. Connect the battery negative cable. D. Turn the ignition switch to position "ON". E. Measure the resistance value between the terminal 5 and 12 of the automatic transmission harness connector C28 and the terminal 21 and 19 of the TCM wiring harness connector P31, inspect if the circuit is open. **Standard Resistance Value: less than 5 Ω** F. Measure the resistance between Terminal 5 and 12 of wiring harness connector C28 in automatic transmission and grounding, inspect if there is short circuit to ground. **Standard Resistance Value: 10 MΩ or more** G. Measure the voltage between Terminal 5 and 12 of wiring harness connector C28 in Automatic Transmission and grounding, inspect if there is short circuit to the power. **Standard Voltage Value: 0 V** Is the circuit normal? **Y** Go to step 4. **N** Repair circuit the circuit fault between the terminals 5 & 12 of the automatic transmission wiring harness connector C28 and the terminal 21 & 19 of the TCM wiring harness connector P31 respectively.
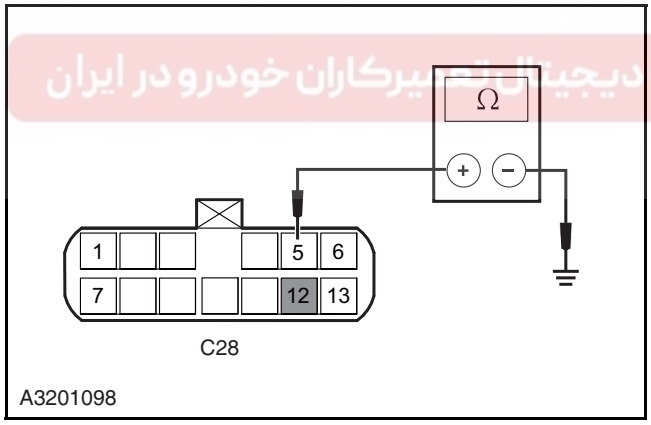 A3201098	
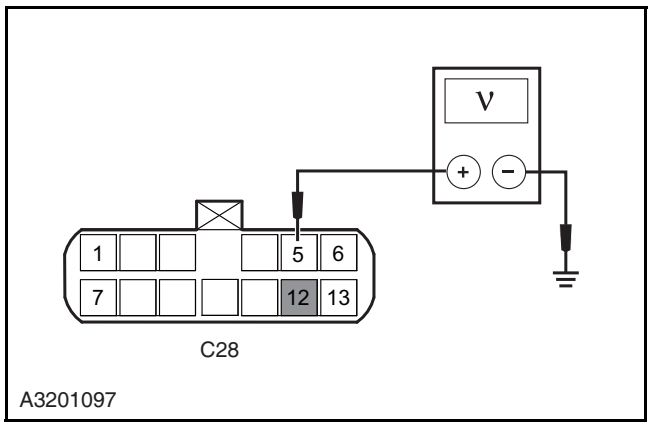 A3201097	

Test Conditions	Details/Results/Actions
4. Inspect the C2 shift control solenoid	
	A. Inspect the C2 shift control solenoid. **Refer to: Linear Pressure Control Solenoid (SLC1, SLC2, SLB1) Inspection (3.2.1 Automatic Transmission, General Procedures).** Is the C2 shift control solenoid normal? **Y** Go to step 5. **N** Replace the C2 shift control solenoid.
5. Inspect the TCM power supply circuit	
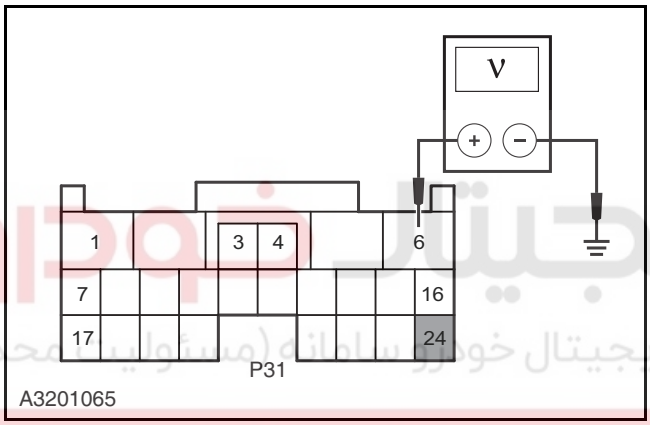	A. Turn the ignition switch to position "LOCK" and disconnect the battery negative cable. B. Disconnect the TCM wiring harness connector P31. C. Connect the battery negative cable. D. Turn the ignition switch to position "ON". E. Measure the voltage between the terminal 6 and 24 of the TCM wiring harness connector P31 and the reliable grounding. **Standard Voltage Value: 11 ~ 14 V** Is the circuit normal? **Y** Go to step 6. **N** Inspect and repair the open circuit fault between the terminal 6 of the TCM wiring harness connector P31 and the terminal 19 of the fuse EF10 of the engine compartment fuse and relay box C01. Inspect and repair the open circuit fault between the terminal 24 of the TCM wiring harness connector P31 and the terminal 7 of the fuse IF04 in the I/P fuse and relay box P01.

Test Conditions	Details/Results/Actions
6. Inspect the TCM ground circuit	
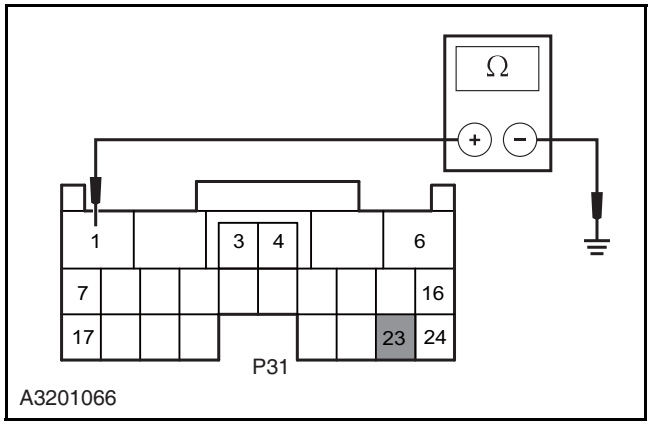	A. Turn the ignition switch to position "LOCK" and disconnect the battery negative cable. B. Disconnect the TCM wiring harness connector P31. C. Measure the resistance between the terminal 1 and 23 of the TCM wiring harness connector P31 and the reliable grounding. **Standard Resistance Value: less than 5 Ω** Is the resistance value normal? **Y** Go to step 7. **N** Inspect and repair the open circuit fault between the TCM wiring harness connector P31 terminal 1 and 23 and the grounding point G104. Verify the system is normal.
7. Inspect the TCM	
	A. Remove the TCM. B. Install the faulted TCM in the vehicle of the same configuration in good condition. Is the vehicle normal after installing the TCM? **Y** Replace the TCM. **Refer to: TCM (3.2.1 Automatic Transmission, Removal and Installation).** **N** Intermittent fault. **Refer to: Intermittent Fault Diagnosis (3.1.13 Electrical Control System - ME7, Symptom Diagnosis and Testing).**

DTC P2707, P2708, P0997, P0998, P0999

1. Fault Code Description

Fault Code	Description	Definition
P2707	B1 pressure control solenoid [SLB1] min. pressure holding	The B1 pressure control solenoid has connects with the terminal 4 and 2 of the TCM wiring harness connector P31 through the terminal 4 and 11 of the automatic transmission wiring harness connector C28.
P2708	B1 pressure control solenoid [SLB1] max. pressure holding	
P0997	B1 pressure control solenoid [SLB1] feedback current holding	
P0998	B1 pressure control solenoid [SLB1] short to ground/open circuit	
P0999	B1 pressure control solenoid [SLB1] short to power	

2. Possible Sources

Fault Code	Test Tactics	Setting Conditions (Control Strategy)	Fault
P2707	Performance inspection Hardware and circuit inspection	• With the vehicle operating in D position, the gear ratio in 2nd and 4th gear is improper and this symptom occurred 5 times.	• Circuit • TCM • Pressure Control Solenoid
P2708		• With the vehicle operating in D gear, the gear shift from 1st to 3rd, from 2nd to 3rd or from 4th to 3rd is abnormal or the 3rd gear ratio is improper, and this symptom occurred 5 times.	
P0997		• With the ignition switch turned to the "ON" position, a solenoid feedback current error is detected and this symptom lasts 3s or longer.	
P0998		• With the ignition switch turned to the "ON" position, a solenoid feedback current error is detected and this symptom lasts 3 s or longer and occurred 5 times.	
P0999		• With the ignition switch turned to the "ON" position, a solenoid feedback current error is detected and this symptom lasts 3 s or longer and occurred 5 times.	

3. Diagnosis

Test Conditions	Details/Results/Actions
1. Inspect the DTC	
	A. Connect the diagnostic tool. B. Diagnose the automatic transmission with the diagnostic tool. Is there any DTC other than P2707, P2708, P0997, P0998 and P0999 ? **Y** Carry out the DTC diagnosis. **Refer to: DTC Diagnostic Procedure Index (3.2.1 Automatic Transmission, DTC Diagnosis and Testing).** **N** Go to step 2.
2. B1 pressure control solenoid control signal voltage	
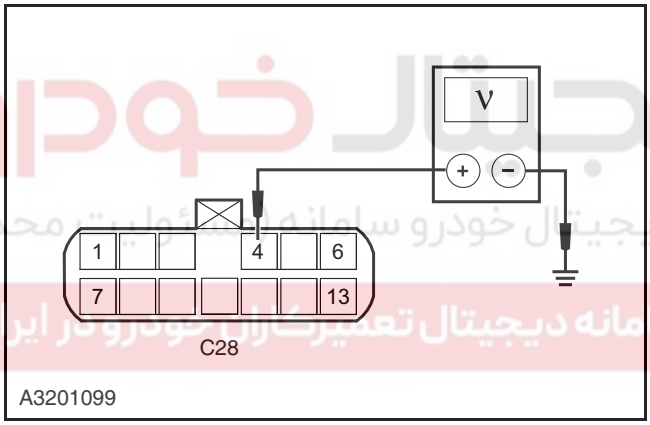	A. Connect the diagnostic tool. B. Turn the ignition switch to "ON" position. C. Execute the active test of the automatic transmission with the diagnostic tool, execute the menu "B1 solenoid current-OFF". D. Measure with the multimeter the voltage between the terminal 4 of the automatic transmission wiring harness connector C28 and the reliable grounding. **Standard Voltage Value: 0 V** E. Execute the active test of the automatic transmission with the diagnostic tool, execute the menu "B1 solenoid current-ON" F. Measure the voltage between the terminal 4 of the automatic transmission wiring harness connector C28 and the reliable grounding with the multimeter. **Standard Voltage Value: 11 ~ 14 V** Is the voltage normal? **Y** Intermittent fault. **Refer to: Intermittent Fault Diagnosis (3.1.13 Electrical Control System - ME7, Symptom Diagnosis and Testing).** **N** Go to step 3.
3. Inspect the circuit from the B1 pressure control solenoid to TCM	

Test Conditions	Details/Results/Actions
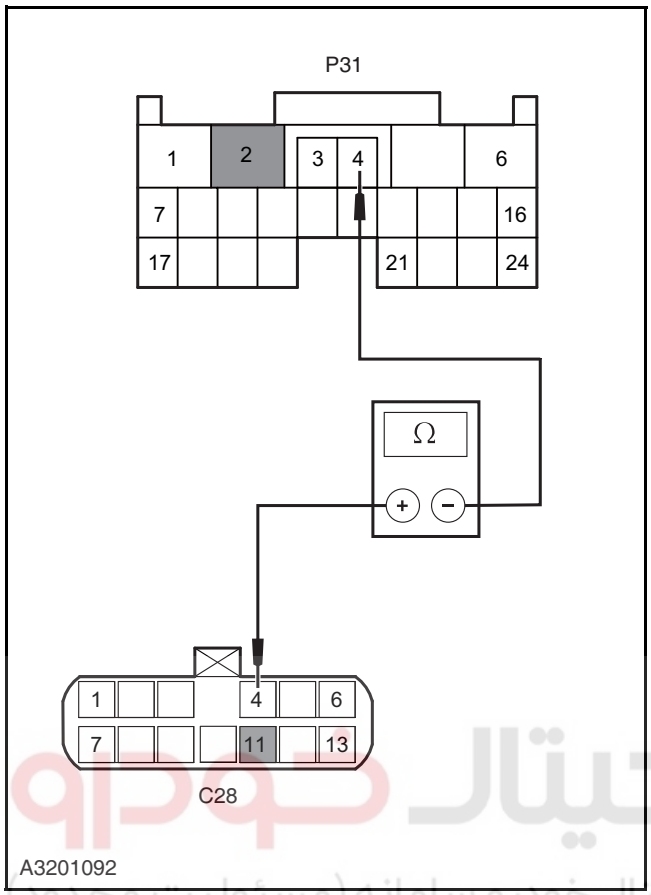	A. Turn the ignition switch to position "LOCK" and disconnect the battery negative cable. B. Disconnect the TCM wiring harness connector P31. C. Connect the battery negative cable. D. Turn the ignition switch to "ON" position. E. Measure the resistance value between the terminal 4 and 11 of the automatic transmission harness connector C28 and the terminal 4 and 2 of the TCM wiring harness connector P31, inspect if the circuit is open. **Standard Resistance Value: less than 5 Ω** F. Measure the resistance between Terminal 4 and 11 of wiring harness connector C28 in automatic transmission and grounding, inspect if there is short circuit to ground. **Standard Resistance Value: 10 MΩ or more** G. Measure the voltage between Terminal 4 and 11 of wiring harness connector C28 in automatic transmission and grounding, inspect if there is short circuit to the power. **Standard Voltage Value: 0 V** Is the circuit normal? **Y** Go to step 4. **N** Repair circuit the circuit fault between the terminals 4 & 11 of the automatic transmission wiring harness connector C28 and the terminal 4 & 2 of the TCM wiring harness connector P31 respectively.
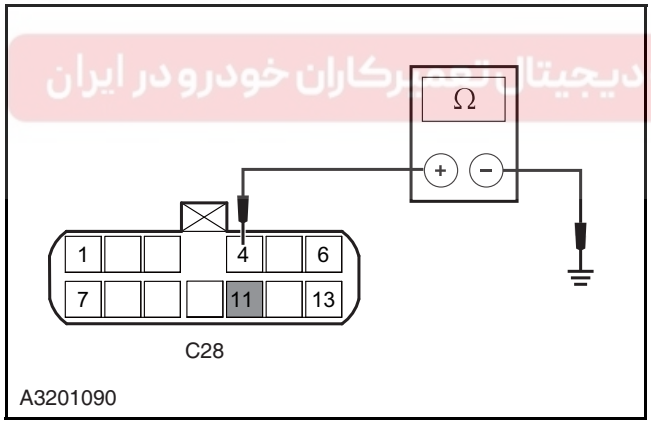	
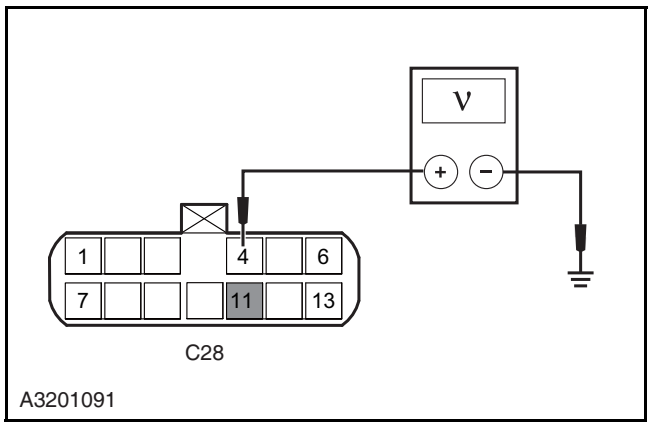	

Test Conditions	Details/Results/Actions
4. Inspect the B1 pressure control solenoid	
	A. Inspect the B1 pressure control solenoid. **Refer to: Linear Pressure Control Solenoid (SLC1, SLC2, SLB1) Inspection (3.2.1 Automatic Transmission, General Procedures).** Is the B1 pressure control solenoid normal? **Y** Go to step 5. **N** Replace the B1 pressure control solenoid.
5. Inspect the TCM power supply circuit	
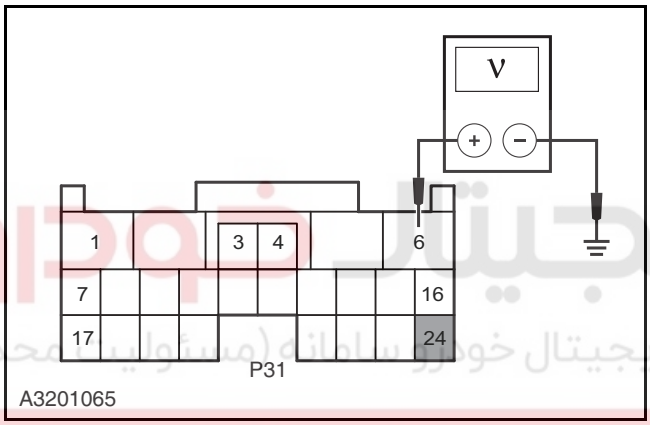	A. Turn the ignition switch to position "LOCK" and disconnect the battery negative cable. B. Disconnect the TCM wiring harness connector P31. C. Connect the battery negative cable. D. Turn the ignition switch to position "ON". E. Measure the voltage between the terminal 6 and 24 of the TCM wiring harness connector P31 and the reliable grounding. **Standard Voltage Value: 11 ~ 14 V** Is the circuit normal? **Y** Go to step 6. **N** Inspect and repair the open circuit fault between the terminal 6 of the TCM wiring harness connector P31 and the terminal 19 of the fuse EF10 of the engine compartment fuse and relay box C01. Inspect and repair the open circuit fault between the terminal 24 of the TCM wiring harness connector P31 and the terminal 7 of the fuse IF04 in the I/P fuse and relay boxP01.

Test Conditions	Details/Results/Actions
6. Inspect the TCM ground circuit	
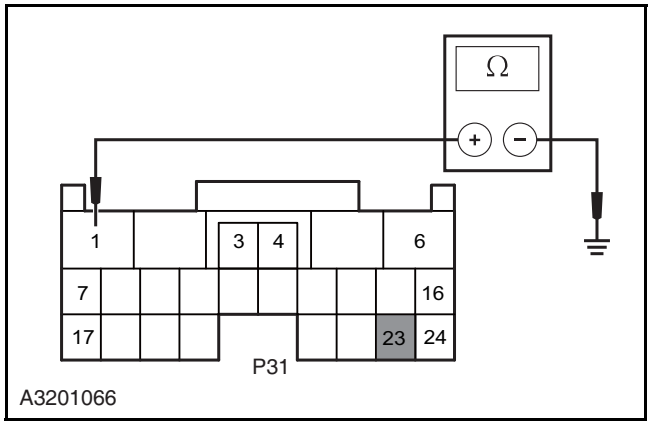	A. Turn the ignition switch to position "LOCK" and disconnect the battery negative cable. B. Disconnect the TCM wiring harness connector P31. C. Measure the resistance between the terminal 1 and 23 of the TCM wiring harness connector P31 and the reliable grounding. **Standard Resistance Value: less than 5 Ω** Is the resistance value normal? **Y** Go to step 7. **N** Inspect and repair the open circuit fault between the TCM wiring harness connector P31 terminal 1 and 23 and the grounding point G104. Verify the system is normal.
7. Inspect the TCM	
	A. Remove the TCM. B. Install the faulted TCM in the vehicle of the same configuration in good condition. Is the vehicle normal after installing the TCM? **Y** Replace the TCM. **Refer to: TCM (3.2.1 Automatic Transmission, Removal and Installation).** **N** Intermittent fault **Refer to: Intermittent Fault Diagnosis (3.1.13 Electrical Control System - ME7, Symptom Diagnosis and Testing).**

DTC P1205

1. Fault Code Description

Fault Code	Description	Definition
P1205	Shifter manual mode problem	The manual mode switch has connections with the terminal 18, 19 & 9 of the TCM wiring harness connector P32 by the terminal 8, 9 & 10 of the gearshift handle wiring harness connector P33 respectively and it connects to the ground through the terminal 2 of P33.

2. Possible Sources

Fault Code	Test Tactics	Setting Conditions (Control Strategy)	Fault
P1205	Hardware and circuit inspection	• Auto mode detects manual mode signal: with the ignition switch in the "ON" position, manual mode signal is detected while in P, R, N or D gear and this symptom lasts 2 s or longer and occurred once. • Manual mode signal detects no signal: with the ignition switch in the "ON" position, manual upshift or downshift signal is not detected in manual mode and this symptom lasts 2 s or longer and occurred once.	• Circuit • Gearshift mechanism • TCM

3. Diagnosis

Test Conditions	Details/Results/Actions
1. General inspection	
	A. Inspect the related wiring harness connector for signs of damage, poor contact, aging or loose. Is it normal? **Y** Go to step 2. **N** Repair the fault.
2. Inspect the DTC	
	A. Connect the diagnostic tool. B. Diagnose the automatic transmission with the diagnostic tool. Is there any other fault code except for P1205? **Y** Carry out the DTC diagnosis. **Refer to: DTC Diagnostic Procedure Index (3.2.1 Automatic Transmission, DTC Diagnosis and Testing).** **N** Go to step 2.
3. Inspect the manual mode circuit	
	A. Inspect the manual mode circuit. **Refer to: Failure to Enable Manual Mode Diagnosis (3.2.1 Automatic Transmission, Symptom Diagnosis and Testing).**

DTC P1229

1. Fault Code Description

Fault Code	Description	Definition
P1229	No power in D position	-

2. Possible Sources

Fault Code	Test Tactics	Setting Conditions (Control Strategy)	Fault
P1229	Hardware and circuit inspection	• The vehicle fails to move when accelerator pedal is pressed with the gearshift handle in D position, this symptom lasts 3.3 s or longer and occurred twice.	• Valve body • Circuit • Automatic transmission • TCM

3. Diagnosis

Test Conditions	Details/Results/Actions
1. General inspection	
	A. Inspect the related fuses and wiring harness connectors for signs of damage, poor contact, aging or loose. Is it normal? **Y** Go to step 2. **N** Repair the fault.
2. Eliminate the fault code	
	A. Connect the diagnostic tool. B. Use the diagnostic tool to delete DTC. C. Shake, pull and push TCM harness connector, as well as sensor and solenoid wiring harness connectors. D. Use the diagnostic tool to redo the diagnosis for DTC. Is there DTC P1299? **Y** Go to step 3. **N** Intermittent fault. **Refer to: Intermittent Fault Diagnosis (3.1.13 Electrical Control System - ME7, Symptom Diagnosis and Testing).**

Test Conditions	Details/Results/Actions
3. Inspect the TCM circuit	
	A. Turn the ignition switch to "LOCK" position and disconnect the battery negative cable. B. Disconnect the TCM wiring harness connector P31, P32 as well as various sensor and solenoid wiring harness connectors. C. Measure the resistance between each terminal of the TCM wiring harness connector P31 and P32 each corresponding sensor and solenoid wiring harness connectors. **Standard Resistance Value: less than 5 Ω** D. Measure the resistance between the terminal of the TCM wiring harness connector P31, P32 and the reliable grounding. **Standard Resistance Value: 10 MΩ or more** Is the resistance value normal? **Y** Replace the automatic transmission. **Refer to: Manual Transmission (3.2.1 Automatic Transmission, Removal and Installation).** **N** Repair the fault circuit.

DTC U0001, U0074, U0100, U2081

1. Fault Code Description

Fault Code	Description	Definition
U0001	CAN bus interruption	ECM, ABS, BCM and TCM communicate via CAN network and the diagnostic tool may be used to access ECM, ABS and TCM through diagnostic interface DLC.
U0074	No CAN signal	
U0100	Lost communication with ECU	
U2081	Lost communication with ABS	

2. Possible Sources

Fault Code	Test Tactics	Setting Conditions (Control Strategy)	Fault
U0001	Hardware and circuit inspection	• With the ignition switch in the "ON" position and TCM communication normal, TCM receives the bus interruption signal and this symptom lasts 0.45 s or longer.	• CAN bus malfunction • ABS malfunction • ECM fault • TCM fault • BCM fault • DLC malfunction
U0074		• With the ignition switch in the "ON" position and TCM communication normal, TCM can not send a signal and this symptom lasts 0.4 s or longer.	
U0100		• With the ignition switch in the "ON" position and TCM communication normal, TCM detects no ECU signal and this symptom lasts 0.5 s or longer.	
U2081		• With the ignition switch in the "ON" position and TCM communication normal, TCM detects no ABS signal and this symptom lasts 0.5 s or longer.	

3. Diagnosis

Test Conditions	Details/Results/Actions
1. General inspection	
	A. Inspect the related wiring harness connector for signs of damage, poor contact, aging or loose. Is it normal? **Y** Go to step 2. **N** Repair the fault.
2. Eliminate the fault code	
	A. Connect the diagnostic tool. B. Use the diagnostic tool to delete DTC. C. Swing ,pull and press the diagnosis connector, the ABS control module, TCM and the engine control module wiring harness connector. D. Use the diagnostic tool to redo the diagnosis for DTC. Is there DTC U0001, U0074, U0100 or U2081? **Y** Go to step 3. **N** Intermittent fault. **Refer to: Intermittent Fault Diagnosis (3.1.13 Electrical Control System - ME7, Symptom Diagnosis and Testing).**
3. Inspect and repair the CAN bus	
	A. Inspect and repair the CAN bus. **Refer to: Diagnostic Tool Can Not Communicate via CAN With BCM (4.3.15 On-board Network System, Symptom Chart).**

Removal and Installation

TCM

Removal

1. Disconnect the battery negative cable.

   Refer to: Battery Inspection (3.1.10 Charging System, General Procedures).

2. Remove the instrument cluster.

   Refer to: Instrument Cluster (5.1.6 Instrument Cluster and Console, Removal and Installation).

3. Remove the framework in instrument cluster.

   Refer to: Blower Motor (4.1.1 Heating, Ventilation and Air Conditioning, Removal and Installation).

4. Remove the two retaining bolts of the TCM.

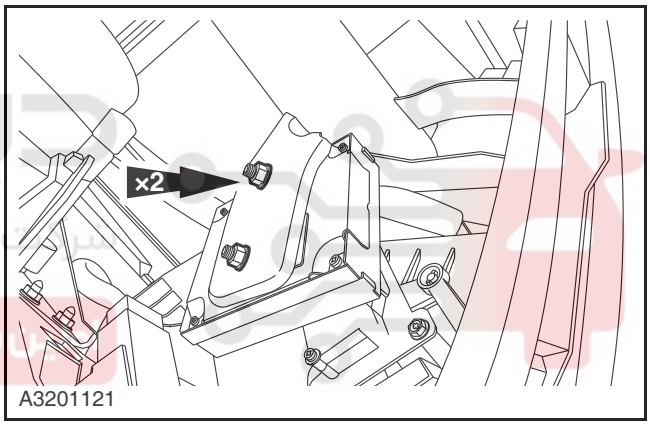

5. Remove the TCM.

   1. Disconnect the TCM wiring harness connector.

   2. Take out the TCM.

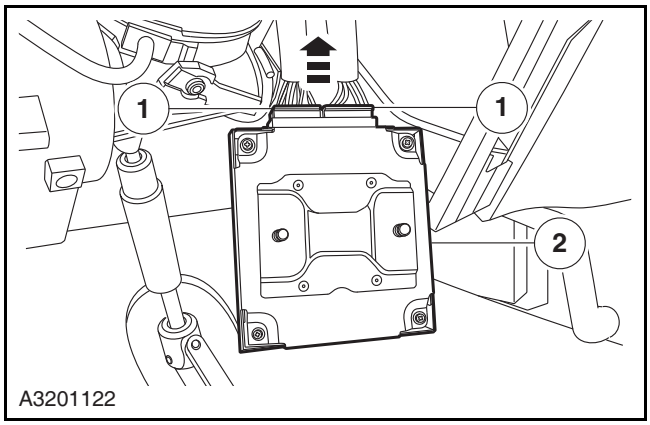

Installation

1. To install, reverse the removal procedure.

Input Shaft Speed Sensor

Removal

1. Remove the battery.

   Refer to: Battery (3.1.10 Charging System, Removal and Installation).

2. Remove the input shaft speed sensor.

   1. Disconnect the input shaft speed sensor wiring harness connector.

   2. Remove the retaining bolt on the input shaft speed sensor.

   Torque: 6 Nm

   3. Remove the input shaft speed sensor.

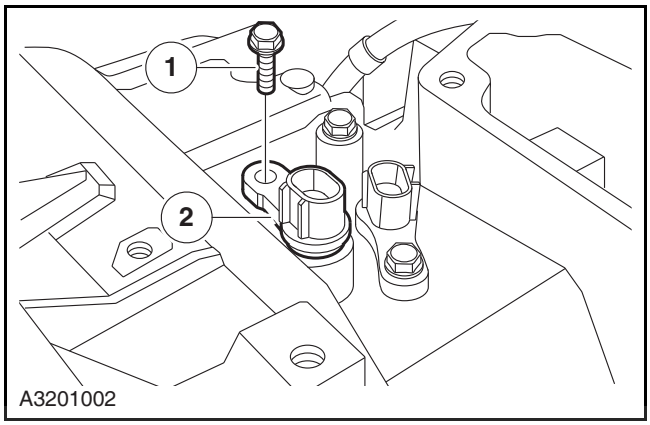

Installation

1. To install, reverse the removal procedure.

CAUTION: Inspect the O-ring and replace it as necessary.

CAUTION: Apply the grease on the O-ring before installing.

Neutral Position Switch

Removal

1. Shift the gearshift lever into the N gear.
2. Disconnect the battery negative cable.

   Refer to: Battery Inspection (3.1.10 Charging System, General Procedures).
3. Disconnect the neutral position switch wiring harness connector.

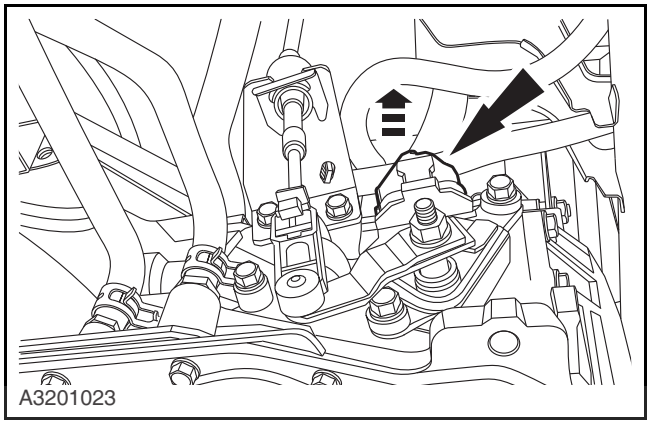

4. Remove the gearshift arm connecting nut.

   Torque: 23 Nm

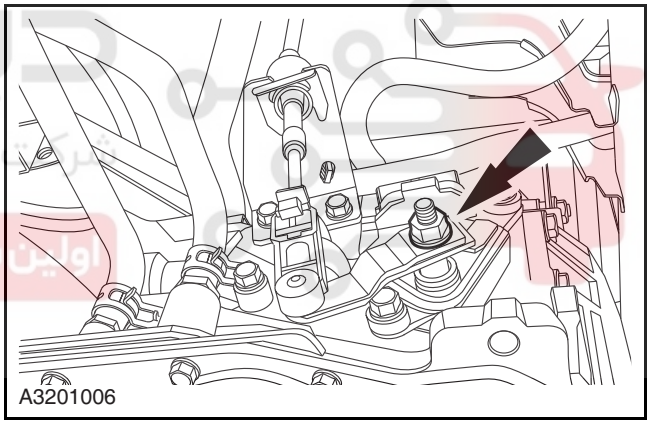

5. Remove the neutral position switch.

   1. Remove the retaining bolt at both sides of neutral position switch.

   2. Take out the automatic transmission neutral position switch.

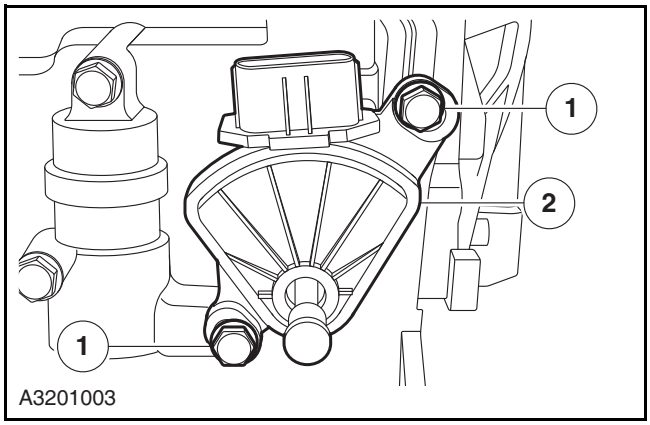

Installation

1. Shift the neutral position switch and the gearshift shaft to N gear position.
2. Install the neutral position switch on the automatic transmission gearshift shaft.
3. Align the SST groove with N gear position baseline by special tools (SST).

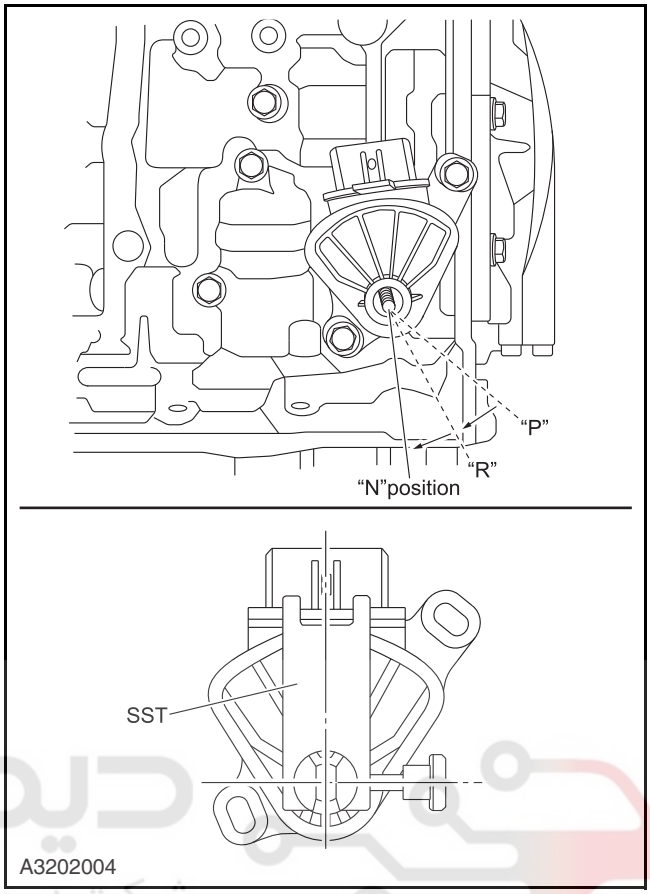

4. Remove the retaining bolt at both sides of neutral position switch.
   Torque: 8 Nm

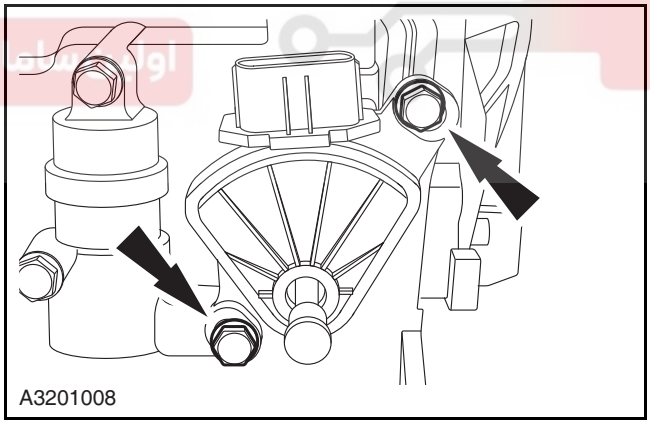

5. Install the gearshift arm retaining nut.

   Torque: 23 Nm

6. Connect the neutral position switch wiring harness connector.
7. Install the battery negative cable.
8. Inspect the neutral position switch whether it works well at every gear.

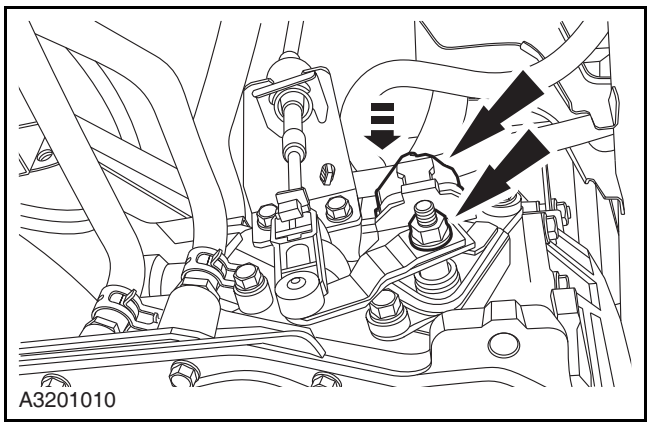

Differential Oil Seal

Removal

Special tool

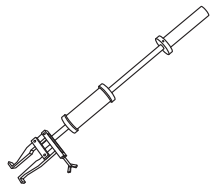 CA302-001	Remover, Differential Oil Seal CA302-001

1. Lift the vehicle.

   Refer to: Lifting (1.1.3 Traction and Lifting, Description and Operation).

2. Loosen and remove the oil drain bolt, then drain the automatic transmission oil.

   Torque: 24 Nm

3. Remove the halfshaft assembly.

   Refer to: Left - Hand Halfshaft (2.2.2 Half Shaft, Removal and Installation).

   Refer to: Right - Hand Halfshaft (2.2.2 Half Shaft, Removal and Installation).

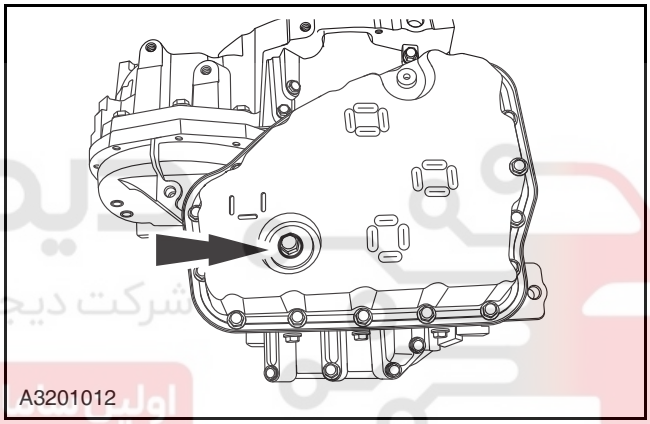

4. Remove the differential oil seal with the special tool.

   Special Tool: Remover, Differential Oil Seal

   CA302 - 001

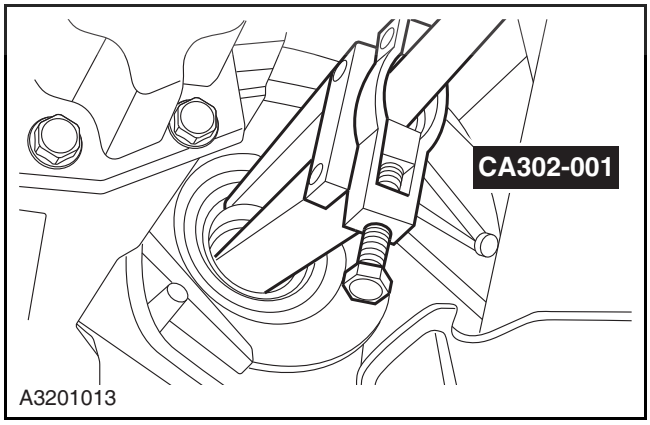

Installation

1. Install the differential oil seal with the special tool.
2. Install the halfshaft.
3. Fill up the automatic transmission with the automatic transmission oil and check the oil level.

   Refer to: Automatic Transmission Oil Level and Quality Inspection (3.2.1 Automatic Transmission, General Procedures).
4. Lower the vehicle.
5. Check the vehicle on road for differential oil seal leakage.

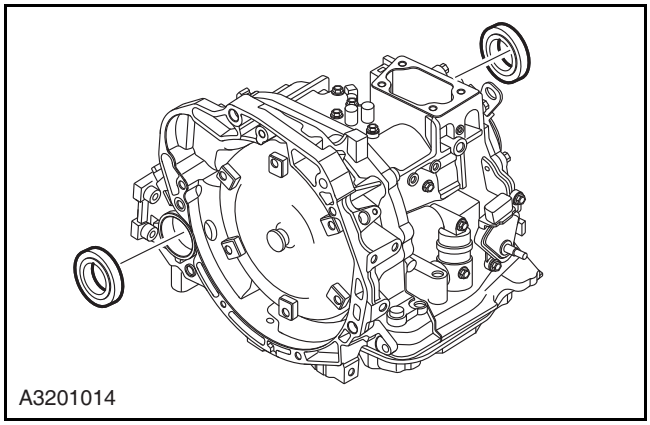
A3201014

Output Shaft Speed Sensor

Removal

1. Remove the battery.

   Refer to: Battery (3.1.10 Charging System, Removal and Installation).

2. Remove the output shaft speed sensor.

   1. Disconnect the wiring harness connector of the output shaft speed sensor.

   2. Remove the retaining bolt on the output shaft speed sensor.

   Torque: 6 Nm

   3. Remove the output shaft speed sensor.

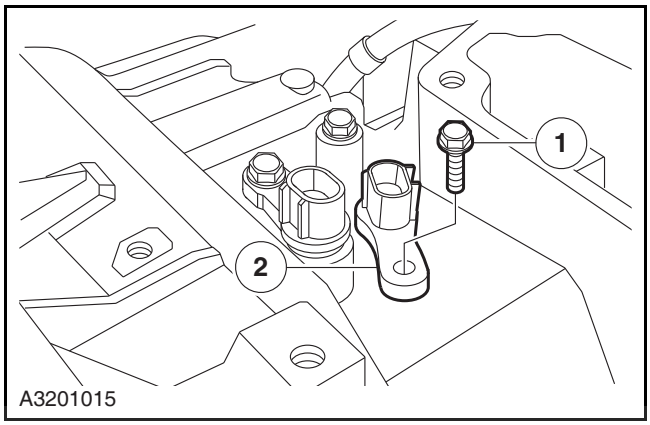

Installation

1. The installation process is reverse.

CAUTION: Inspect the O-ring and replace it as necessary.

CAUTION: Apply vaseline on the O-ring seal before installing it.

Oil Sump

Removal

1. Lift the vehicle.

   Refer to: Lifting (1.1.3 Traction and Lifting, Description and Operation).

2. Loosen and remove the oil drain bolt, then drain the automatic transmission oil.

   Torque: 24 Nm

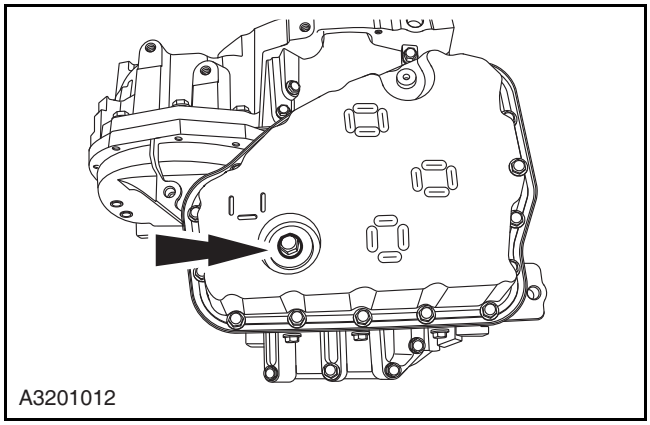

3. Remove 17 retaining nuts of the automatic transmission oil sump.

   Torque: 8 Nm

4. Remove the automatic transmission oil sump and discard the seal.
5. Clean the contact surface of the automatic transmission and the oil sump seal.

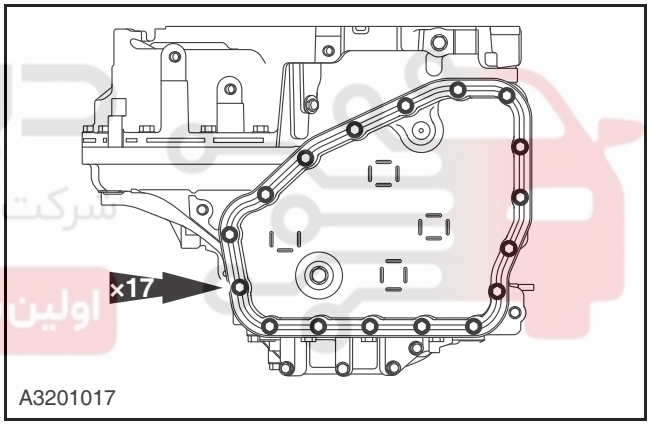

Installation

1. The installation process is reverse.
2. Use a new automatic transmission seal.
3. Fill up the automatic transmission with the automatic transmission oil and check the oil level.

   Refer to: Automatic Transmission Oil Level and Quality Inspection (3.2.1 Automatic Transmission, General Procedures).

4. Check the vehicle on road for oil leakage.

Oil Temperature Sensor

Removal

1. Disconnect the battery negative cable.

   Refer to: Battery Inspection (3.1.10 Charging System, General Procedures).

2. Disconnect the automatic transmission wiring harness connector.
3. Remove the automatic transmission oil sump.

   Refer to: Oil Sump (3.2.1 Automatic Transmission, Removal and Installation).

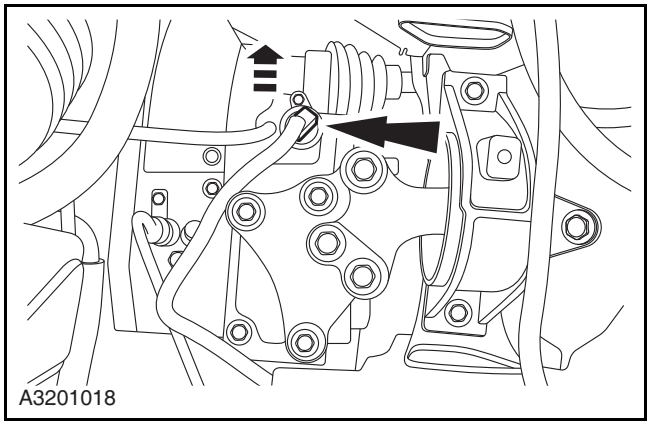
A3201018

4. Remove the automatic transmission oil filter assembly.

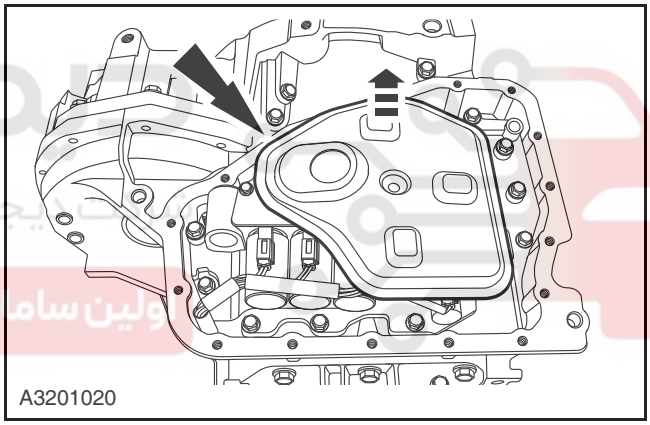
A3201020

5. Disconnect the gearshift solenoid valve wiring harness connector.
6. Remove the retaining bolt of the oil temperature sensor latch.

   Torque: 6 Nm

7. Take out the oil temperature sensor.

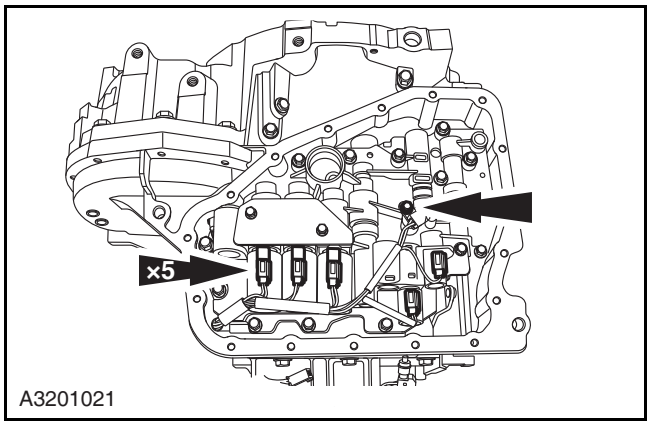

A3201021

8. Remove the automatic transmission valve body assembly.

   Torque: 8 Nm

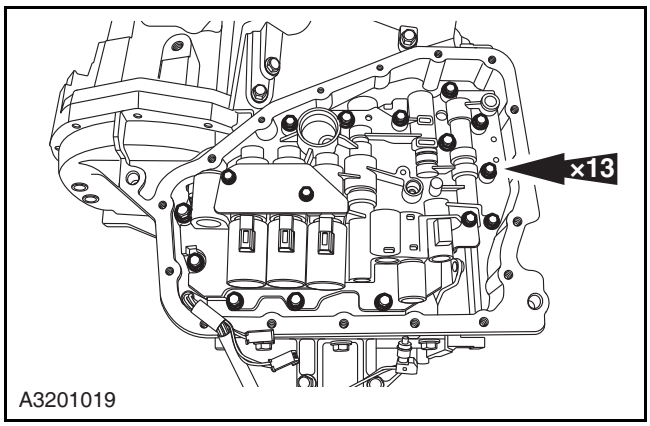

9. Take out the automatic transmission wiring harness.

   1. Remove the retaining bolt of the automatic transmission wiring harness.

   Torque: 6 Nm

   2. Take out the automatic transmission wiring harness.

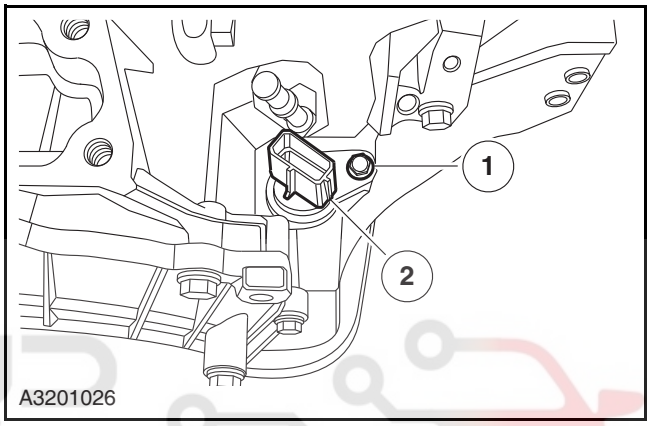

Installation

1. The installation process is reverse.

   Refer to: Automatic Transmission Oil Level and Quality Inspection (3.2.1 Automatic Transmission, General Procedures).

   CAUTION: Inspect the O-ring and replace it as necessary.

   CAUTION: Apply vaseline on the O-ring seal before installing it.

Automatic Transmission Radiator

Removal and Installation

Refer to: Radiator (3.1.4 Cooling System, Removal and Installation).

Automatic Transmission

Removal

Special tool

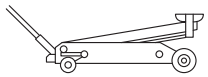 CA301-004	Engine Equalizing Frame CA301-004

General Equipment

Flat Jack

1. Remove the battery.

   Refer to: Battery (3.1.10 Charging System, Removal and Installation).

2. Remove 3 retaining bolts of the air filter assembly.

   Torque: 10 Nm

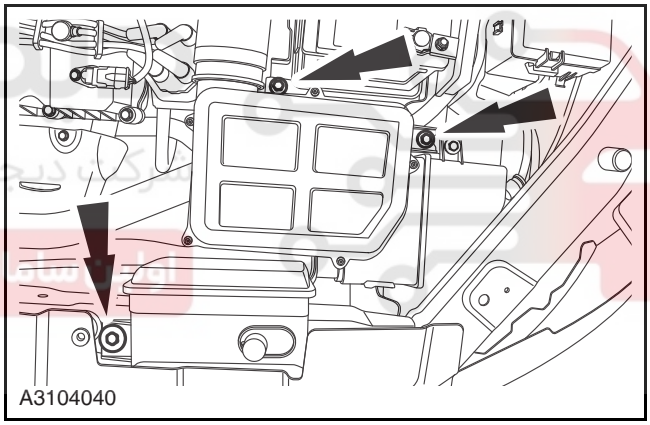
A3104040

3. Remove the connecting clamp between the air intake hose and throtte, and take out the air filter assembly.

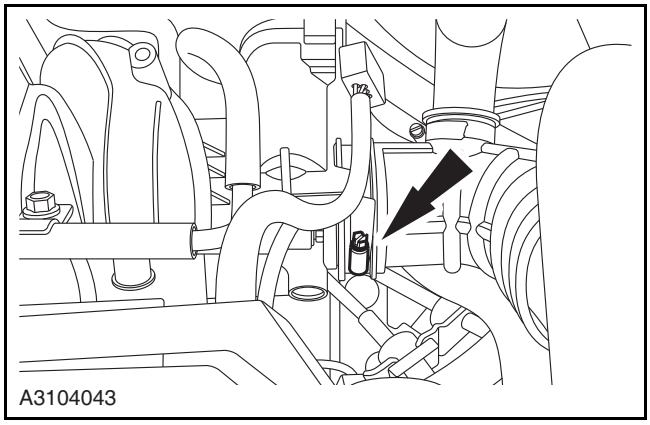
A3104043

4. Disconnect the wiring harness connector connecting with the automatic transmission.

1. Disconnect the wiring harness connector of the input shaft speed sensor.

2. Disconnect the wiring harness connector of the output shaft speed sensor.

3. Disconnect the wiring harness connector of the automatic transmission.

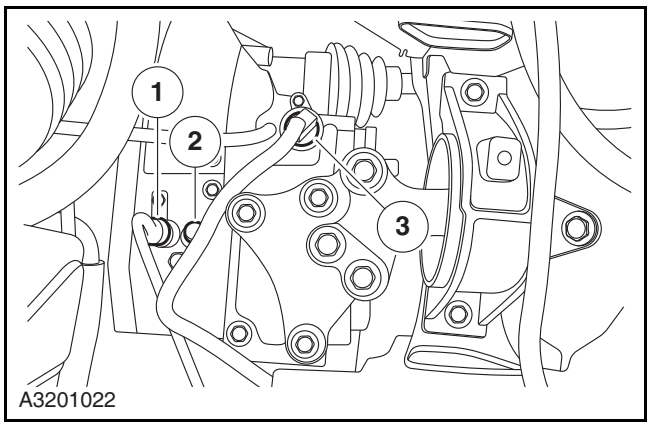

5. Disconnect the neutral position switch wiring harness connector.

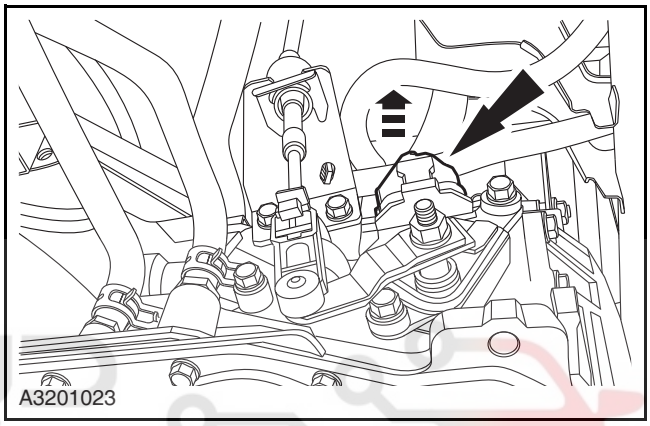

6. Disconnect the gearshift lever cable and the automatic transmission.

1. Disconnect the gearshift lever cable and the fixing support.

2. Remove the retaining nut of the gearshift arm.

Torque: 23 Nm

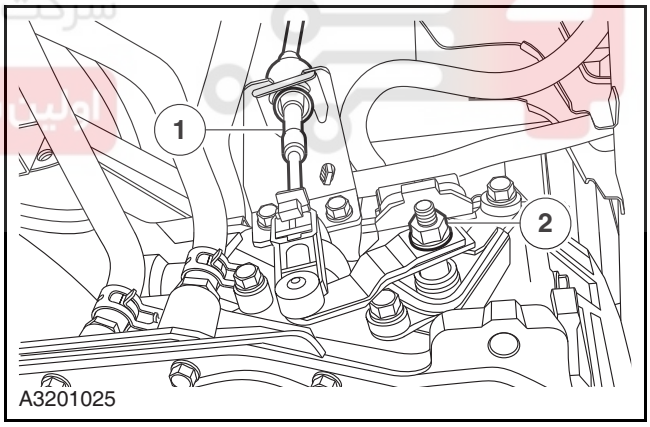

7. Remove the retaining bolt of the automatic transmission earth wire.

Torque: 10 Nm

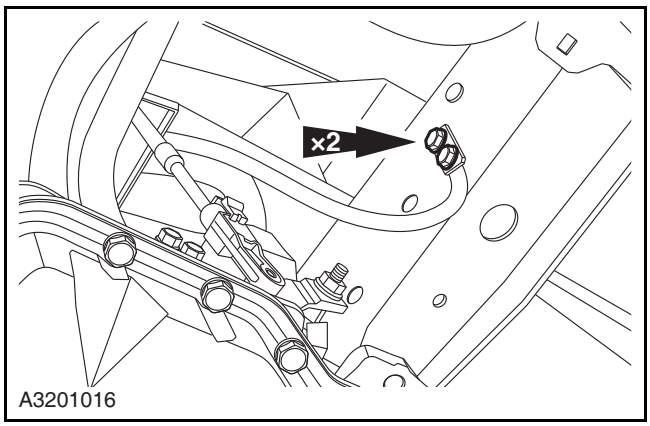

8. Install the engine balancing support.

   Special Tool: CA301-004

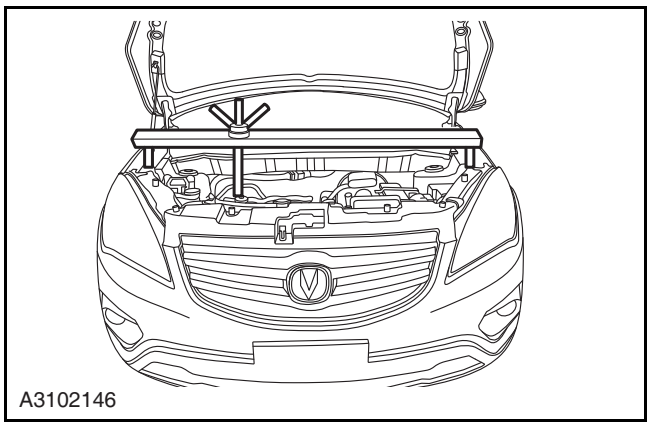
A3102146

9. Remove 2 connecting bolts on the upper automatic transmission and the engine.

   Torque: 85 Nm

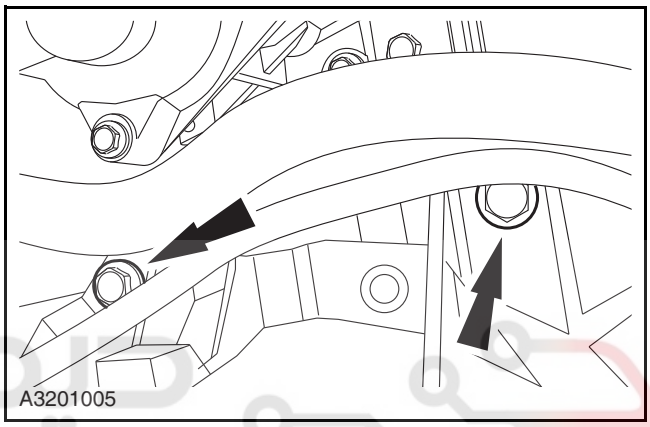
A3201005

10. Loosen 3 retaining bolts of the left transmission support.

    Torque: 85 Nm

CAUTION: Do not remove the bolt.

11. Lift the vehicle.

    Refer to: Lifting (1.1.3 Traction and Lifting, Description and Operation).

12. Remove the half shaft on both sides.

    Refer to: Half Shaft (2.2.2 Half Shaft, Removal and Installation).

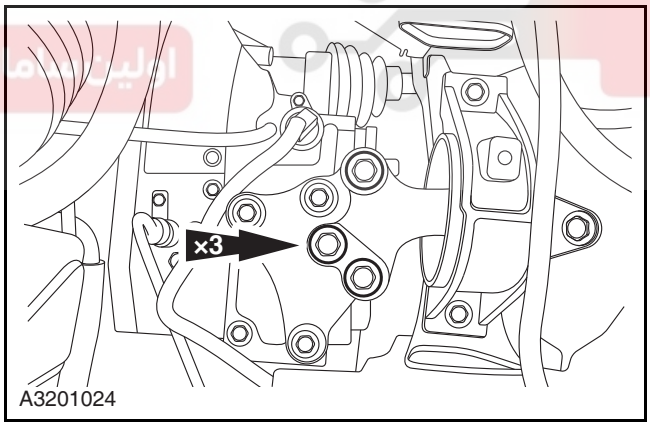

A3201024

13. Loosen and remove the oil drain bolt, then drain the automatic transmission oil.

Torque: 24 Nm

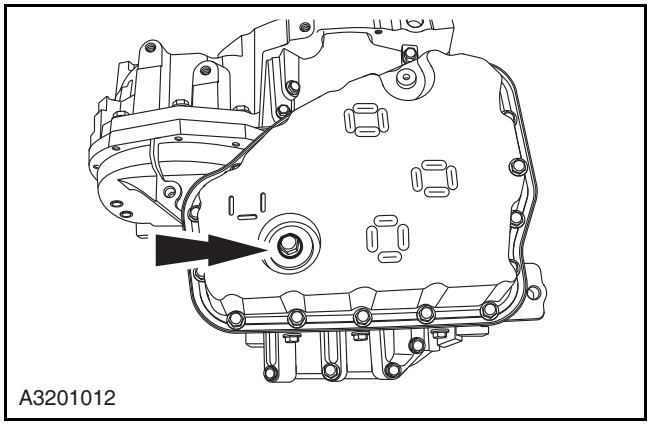
A3201012

14. Remove the automatic transmission 2 radiation Pipes.

15. Support the transmission with the flat jack.

General Tool: Flat jack

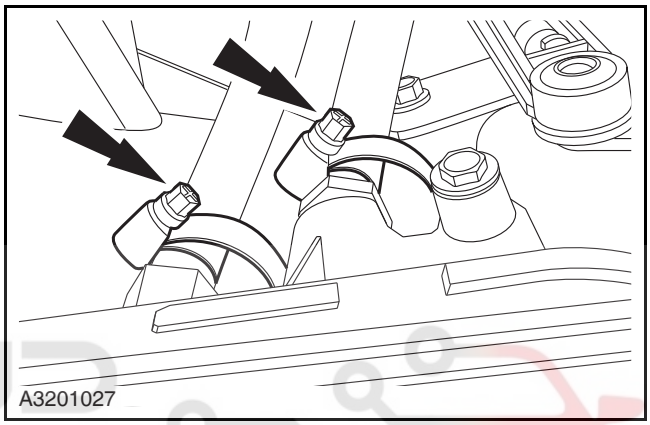
A3201027

16. Remove the connecting bolt connecting the front lower automatic transmission and the engine.

Torque: 85 Nm

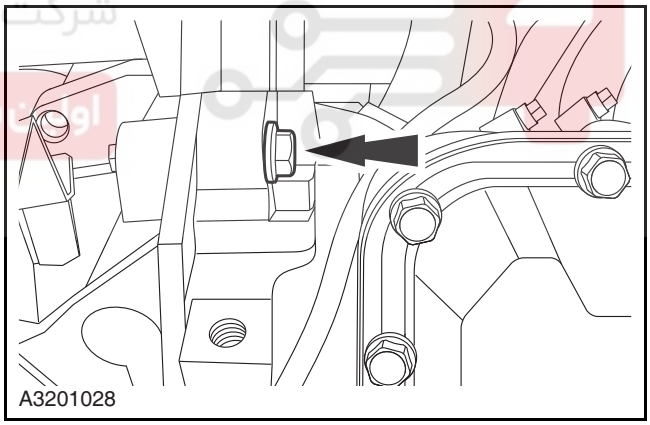
A3201028

17. Remove 5 connecting bolts on the lower support assembly of the automatic transmission.

Torque: 65 Nm

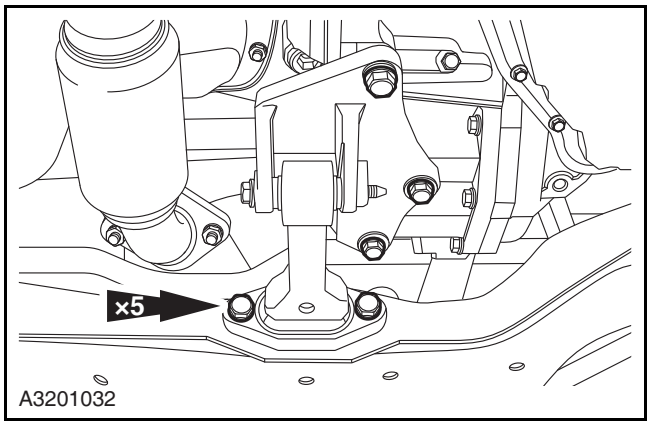

A3201032

18. Remove the connecting bolt connecting the lower automatic transmission and the engine.

Torque: 45 Nm

19. Remove the starter motor.

Refer to: Starter Motor (3.1.9 Starting System, Removal and Installation).

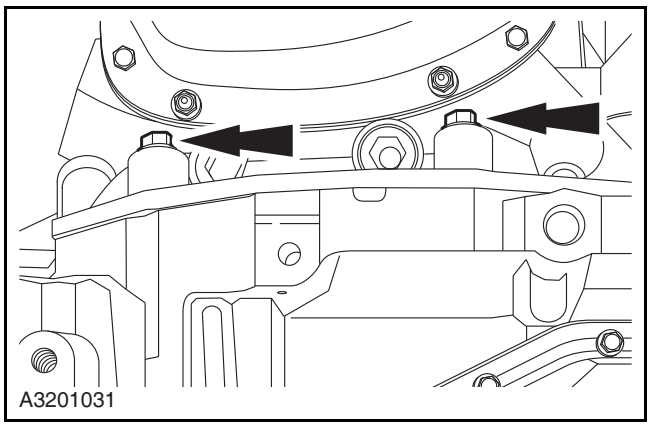

20. Remove the connecting bolt from the backside automatic transmission to the engine.

Torque: 85 Nm

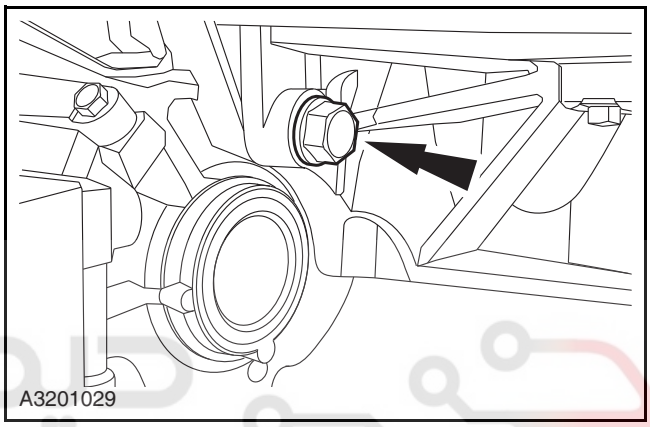

21. Remove 6 connecting bolts of the drive disc and the automatic transmission.

Torque: 23 Nm

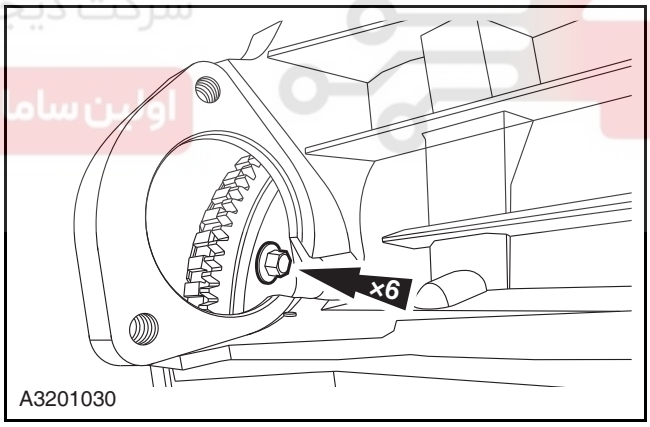

22. Remove 3 retaining bolts of the left automatic transmission support.

Torque: 85 Nm

23. Lower the jack slowly and take out the automatic transmission assembly.

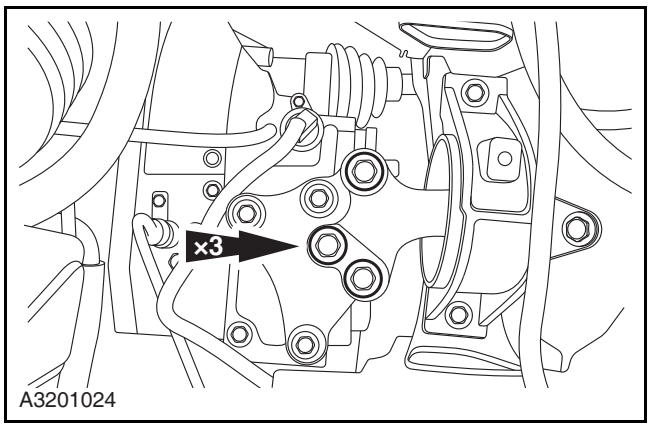

Installation

1. To install, reverse the removal procedure.
2. Fill up the automatic transmission with the automatic transmission oil and check the oil level.

   Refer to: Automatic Transmission Oil Level and Quality Inspection (3.2.1 Automatic Transmission, General Procedures).

Specifications

Torque Specifications

Item	Nm	lb-ft	lb-in
Gearshift mechanism base mounting nut	23	17	-
Gearshift lever handle bolt	5	-	37
Gearshift arm mounting nut	23	17	-
Parking/neutral position switch (NSW) mounting bolt	8	-	71
Gearshift cable support mounting bolt	23	17	-

Description and Operation

System Overview

Straightline Gearshift Mechanism

Use the straight gearshift mechanism with P, R, N and D four gears.

Gears achieved by each shift gear are as follows:

Gearshiftlever position	Achieved gears
P	P
R	R
N	N
D	1, 2, 3, 4

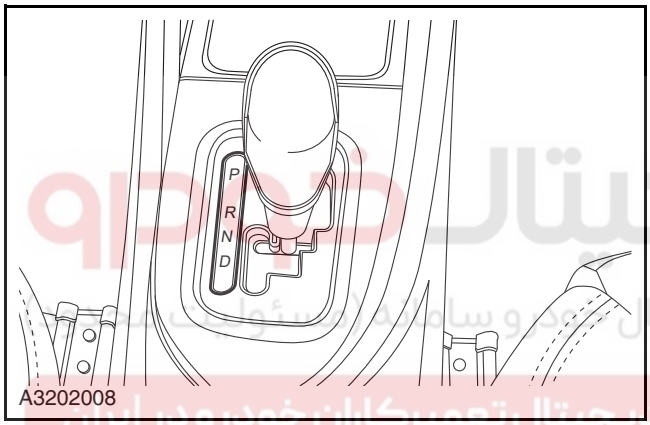

Location View

Control Unit Chart

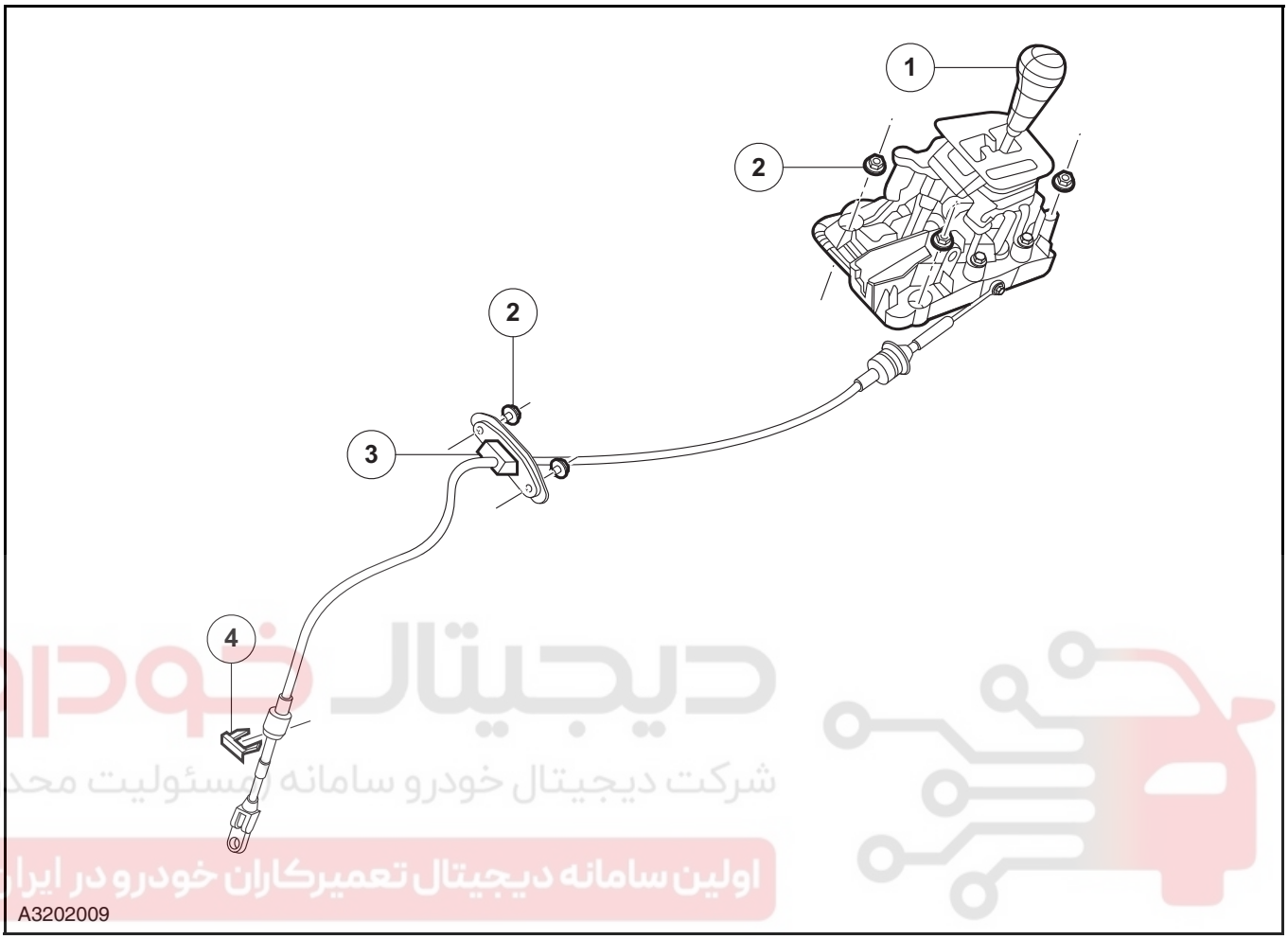

Item	Description	Item	Description
1	Gearshift mechanism assembly	3	Gearshift control cables assembly
2	Hex flange bearing surface toothed nut	4	E-type clip

General Procedures

Gearshift Control Cable Adjustment

Special Tool

Special Tool SST

1. Shift the transmission into "N" gear.

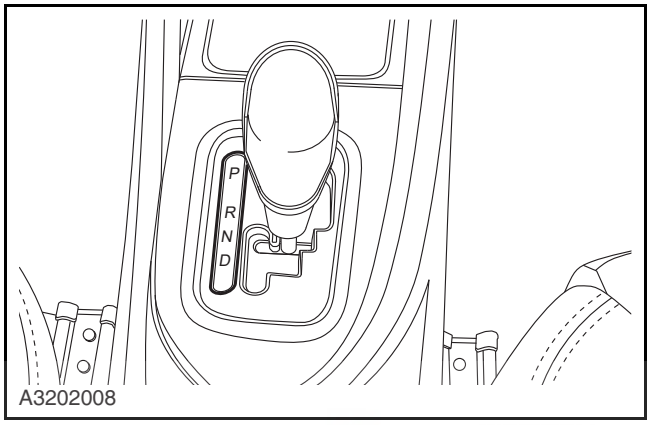

2. Make sure that the external bushing of the gearshift lever cable can slide freely when not locked in.

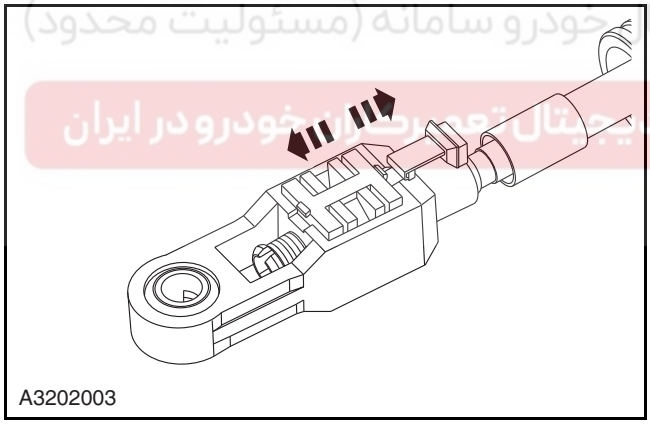

3. Adjust the neutral position switch.
   - Loosen 2 retaining bolts of the neutral position switch for adjustment.
   - Shift the transmission manual valve lever into the "N" gear.
   - Align the SST groove with "N" gear position baseline by special tools (SST).
   - Tighten 2 bolts.

CAUTION: Tighten 2 bolts again when the neutral position switch is adjusted to the "N" gear.

CAUTION: Parts removed can not be reused and use new neutral position switch.

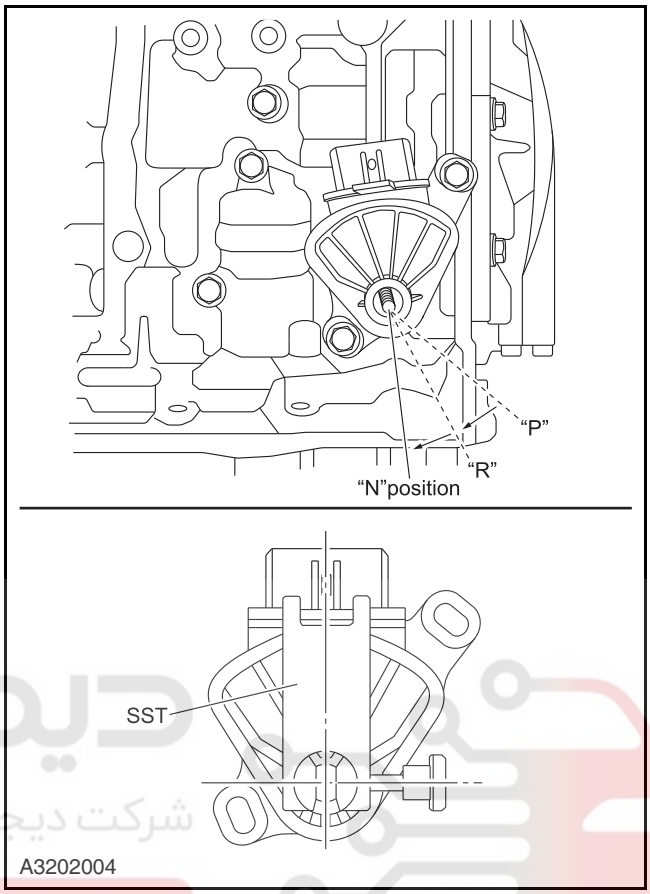

4. Press the fixture block to close the adjustment component.

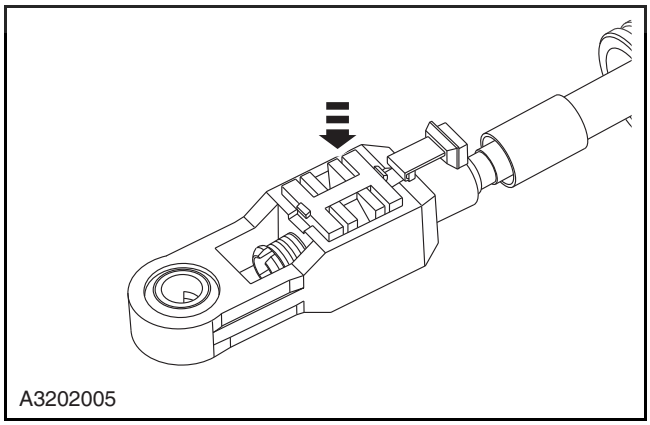

5. Dial in the locking hook to fasten the fixture block.

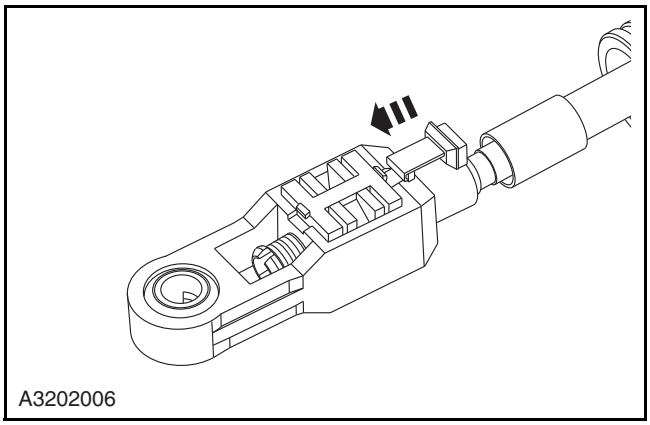

6. Inspect the gearshift lever cable adjustment and each gear.

Symptom Diagnosis and Testing

Inspection and Verification

1. Verify the customer concern.
2. Visually inspect for obvious signs of mechanical damage or electric damage.
3. If an obvious cause for an observed or reported concern is found, correct the cause before proceeding to the next step.
4. If the cause is not evident, verify the symptom and refer to the Symptom Chart.

Visual Inspection Chart

Mechanical
• Gearshift lever • Gearshift cable • Gearshift cable connection

Symptom Chart

Symptom	Possible Sources	Action
The gearshift lever has no response	• Connection drops	• Inspect and repair the gearshift lever connection.
	• Cable	• Repair or repalce the cable.
	• Gearshift lever	• Repair or replace the gearshift lever.
	• Neutral position switch	• Replace the neutral position switch.
	• Transmission control module	• Replace the transmission control module.
	• inner fault of the transmission	• Replace the transmission.

Removal and Installation

Gearshift Mechanism

Removal

1. Disconnect the battery negative cable.

   Refer to: Battery Inspection (3.1.10 Charging System, General Procedures).

2. Remove the console.

   Refer to: Console (5.1.6 Instrument Cluster and Console, Removal and Installation).

3. Disconnect the gear shift handle wiring harness connector.

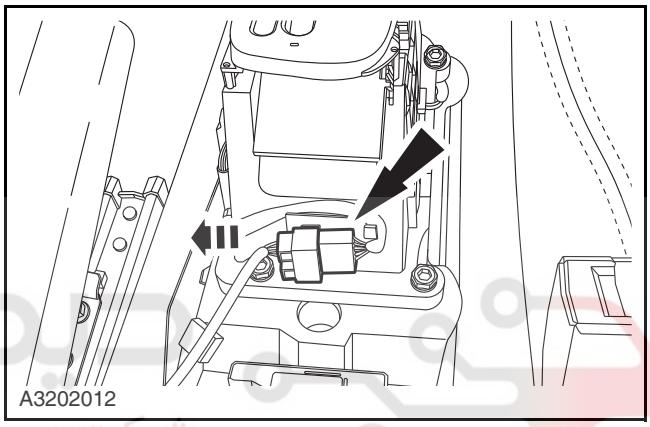
A3202012

4. Remove the 4 retaining bolts on the gearshift mechanism.

   Torque: 23 Nm

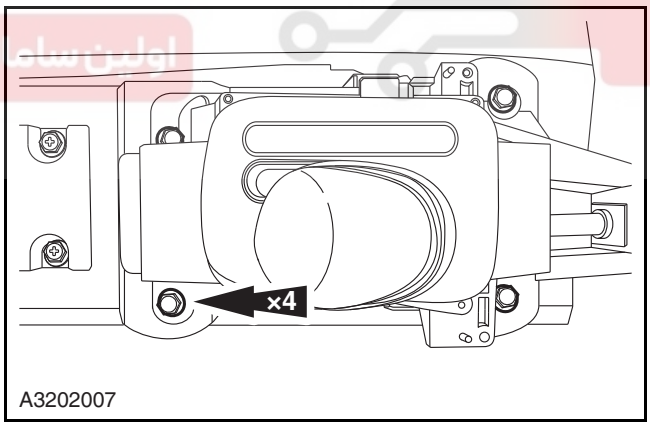

A3202007

5. Detach the gearshift cable and the gearshift mechanism connection.

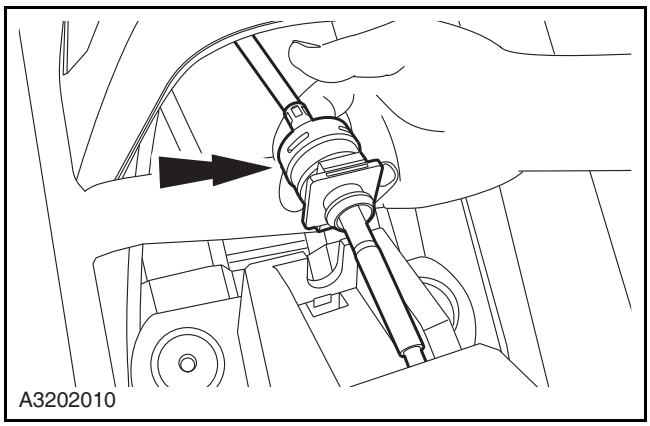

6. Remove the gearshift mechanism.

   1. Detach the gearshift cable and the gearshift mechanism connection.

   2. Remove the gearshift mechanism.

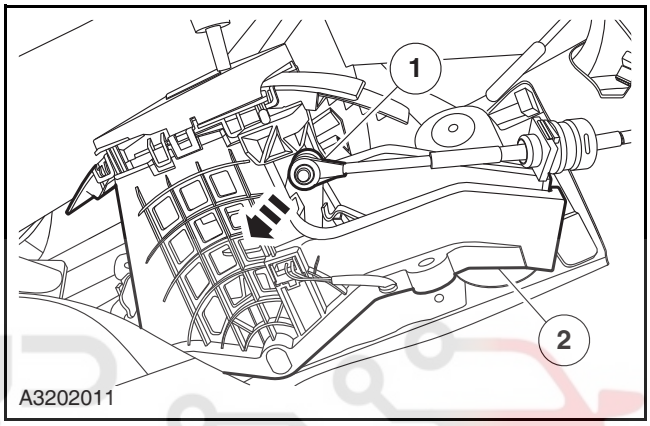

Installation

1. To install, reverse the removal procedure.
2. Adjust the gearshift cable.

   Refer to: Gearshift Cable Adjustment (3.2.2 Automatic Transmission, Transaxle - External Control, General Procedures).