WWW.DIGITALKHODRO.COM 021 62 99 92 92

Windshield/Window Glass

Circuit Diagram (Page 1 of 4)

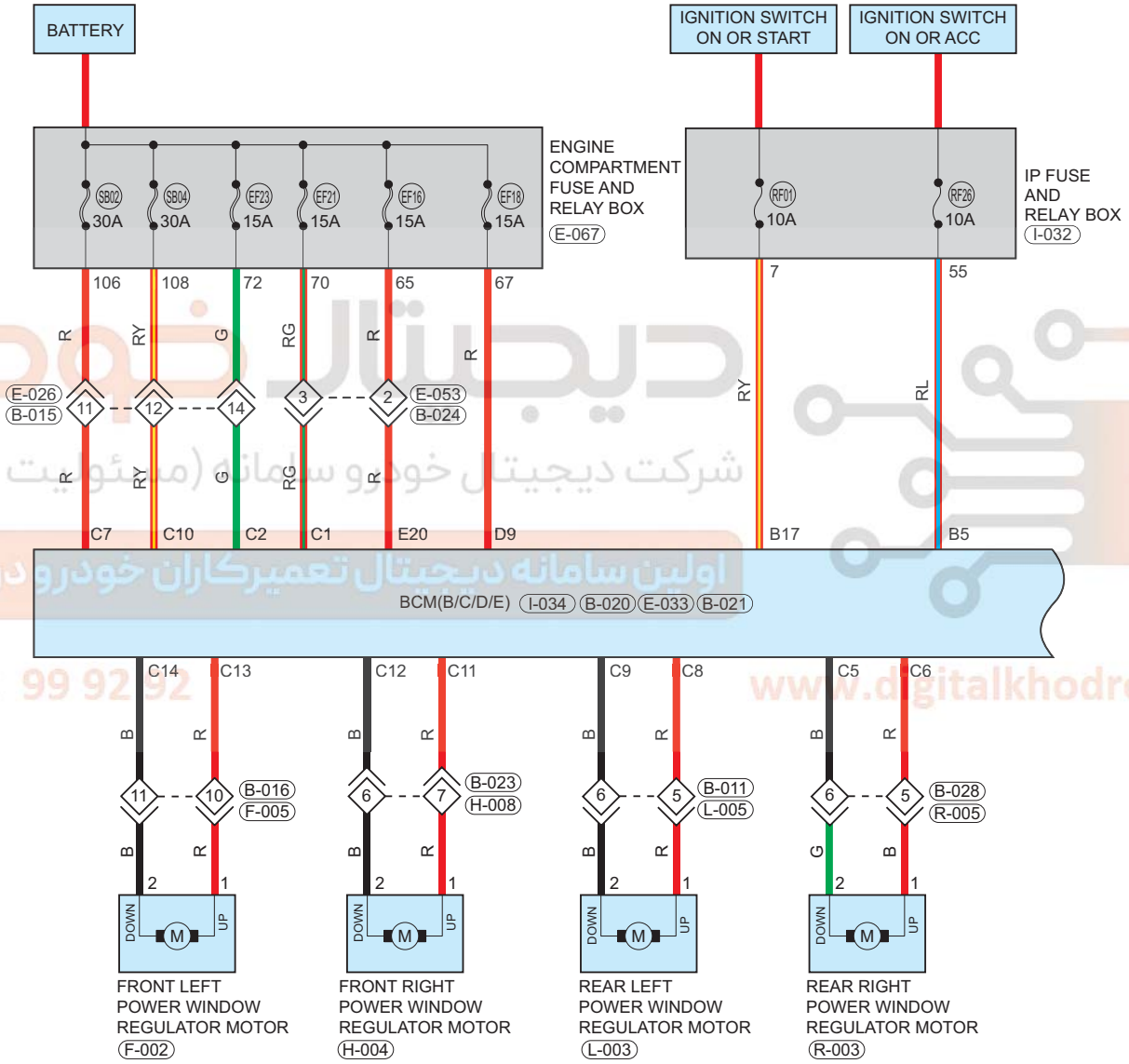

EA13T090700

WWW.DIGITALKHODRO.COM 021 62 99 92 92

WWW.DIGITALKHODRO.COM 021 62 99 92 92

Parts Location

Connector Code	See Page	Connector Code	See Page	Connector Code	See Page
E-067	08-5 (MT) 08-7 (AT)	I-032	08-10	I-034	08-10
B-020	08-12	E-033	08-5 (MT) 08-7 (AT)	B-021	08-12
F-002	08-14	H-004	08-15	L-003	08-16
R-003	08-17				

Fuse and Relay

Fuse/Relay	See Page	Fuse and Relay Box
RF01	06-10	IP Fuse and Relay Box
RF26	06-10	IP Fuse and Relay Box
EF16	06-2	Engine Compartment Fuse and Relay Box
EF18	06-2	Engine Compartment Fuse and Relay Box
EF21	06-2	Engine Compartment Fuse and Relay Box
EF23	06-2	Engine Compartment Fuse and Relay Box
SB02	06-2	Engine Compartment Fuse and Relay Box
SB04	06-2	Engine Compartment Fuse and Relay Box

شرکت دیجیتال خودرو سامانه (مسئولیت محدود)

Location of Junction Connector

Connector Code	See Page	Connector Code	See Page	Connector Code	See Page
E-026, B-015	08-5, 08-12 (MT) 08-7, 08-12 (AT)	E-053, B-024	08-5, 08-12 (MT) 08-7, 08-12 (AT)	B-016, F-005	08-12, 08-14
B-023, H-008	08-12, 08-15	B-011, L-005	08-12, 08-16	B-028, R-005	08-12, 08-17

021 62 99 92 92 www.digitalkhodro.com

Form of Connector

Connector Code	See Page	Connector Code	See Page	Connector Code	See Page
E-067	12-6	I-032	12-9	I-034	12-9
B-020	12-11	E-033	12-3	B-021	12-11
F-002	12-13	H-004	12-13	L-003	12-14
R-003	12-14	E-026, B-015	12-3	E-053, B-024	12-5
B-016, F-005	12-11	B-023, H-008	12-12	B-011, L-005	12-10
B-028, R-005	12-12				

WWW.DIGITALKHODRO.COM 021 62 99 92 92

WWW.DIGITALKHODRO.COM 021 62 99 92 92

Circuit Diagram (Page 2 of 4)

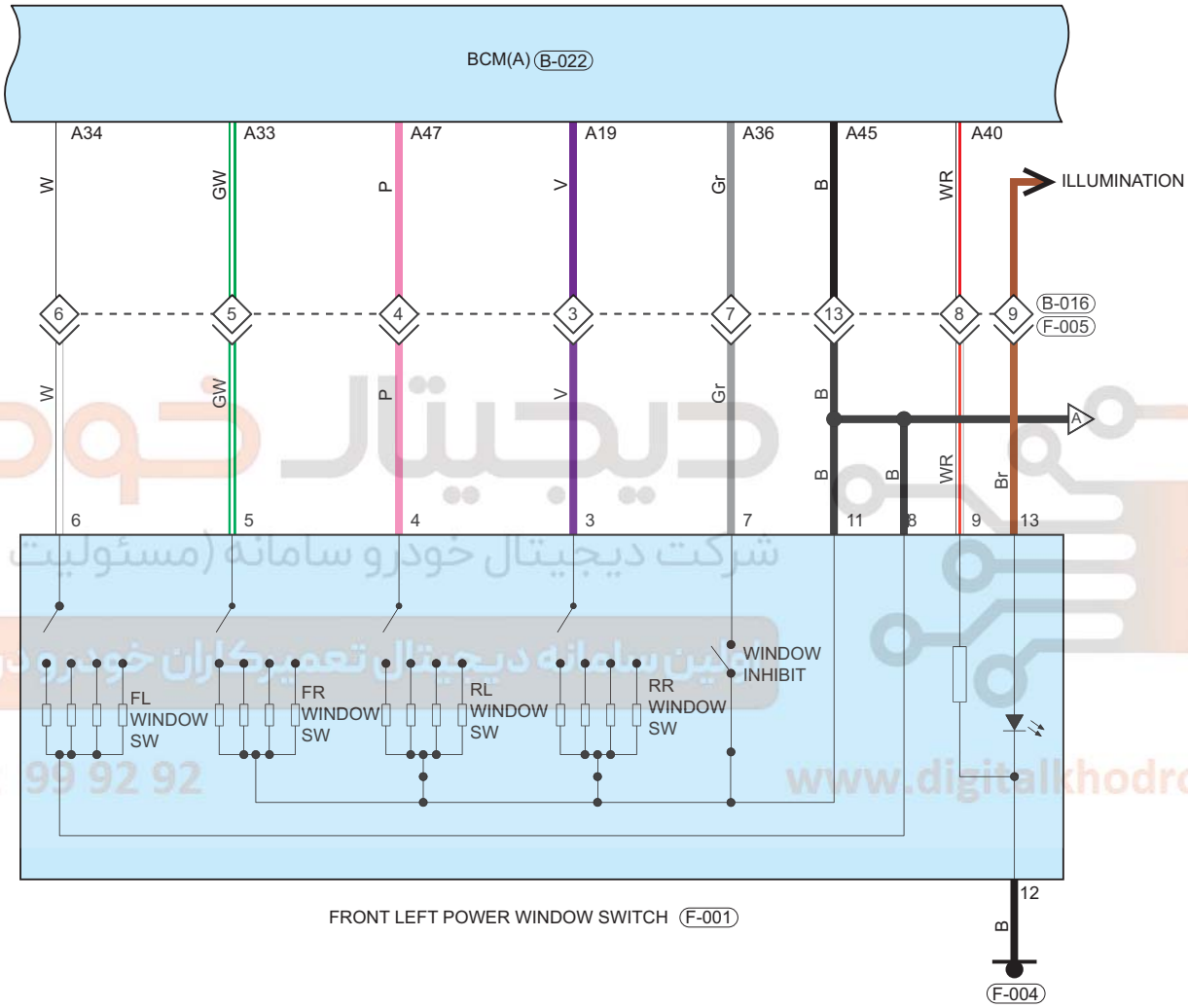

EA13T090710

WWW.DIGITALKHODRO.COM 021 62 99 92 92

WWW.DIGITALKHODRO.COM 021 62 99 92 92

Parts Location

Connector Code	See Page	Connector Code	See Page	Connector Code	See Page
B-022	08-12	F-001	08-14	F-004	08-14

Location of Junction Connector

Connector Code	See Page	Connector Code	See Page	Connector Code	See Page
B-016, F-005	08-12, 08-14				

Form of Connector

Connector Code	See Page	Connector Code	See Page	Connector Code	See Page
B-022	12-11	F-001	12-13	F-004	12-13
B-016, F-005	12-11				

دیجیتال خودرو
شرکت دیجیتال خودرو سامانه (مسئولیت محدود)
اولین سامانه دیجیتال تعمیرکاران خودرو در ایران
021 62 99 92 92 www.digitalkhodro.com

WWW.DIGITALKHODRO.COM 021 62 99 92 92

WWW.DIGITALKHODRO.COM 021 62 99 92 92

Circuit Diagram (Page 3 of 4)

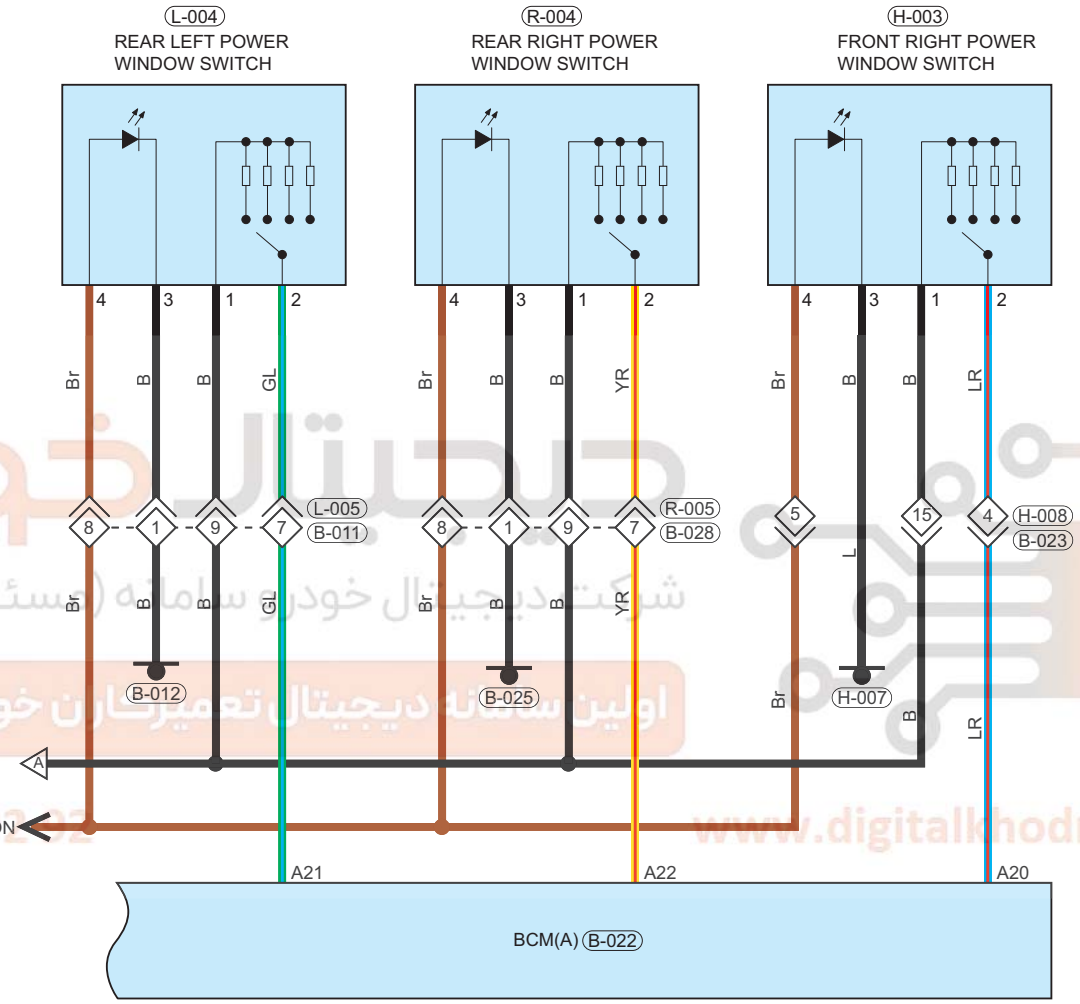

EA13T090720

WWW.DIGITALKHODRO.COM 021 62 99 92 92

WWW.DIGITALKHODRO.COM 021 62 99 92 92

Parts Location

Connector Code	See Page	Connector Code	See Page	Connector Code	See Page
L-004	08-16	R-004	08-17	H-003	08-15
B-012	08-12	B-025	08-12	H-007	08-15
B-022	08-12				

Location of Junction Connector

Connector Code	See Page	Connector Code	See Page	Connector Code	See Page
L-005, B-011	08-16, 08-12	R-005, B-028	08-17, 08-12	H-008, B-023	08-15, 08-12

Form of Connector

Connector Code	See Page	Connector Code	See Page	Connector Code	See Page
L-004	12-14	R-004	12-14	H-003	12-13
B-012	12-10	B-025	12-12	H-007	12-13
B-022	12-11	L-005, B-011	12-14	R-005, B-028	12-14
H-008, B-023	12-13				

دیجیتال خودرو
شرکت دیجیتال خودرو سامانه (مسئولیت محدود)
اولین سامانه دیجیتال تعمیرکاران خودرو در ایران
021 62 99 92 92 www.digitalkhodro.com

WWW.DIGITALKHODRO.COM 021 62 99 92 92

WWW.DIGITALKHODRO.COM 021 62 99 92 92

Circuit Diagram (Page 4 of 4)

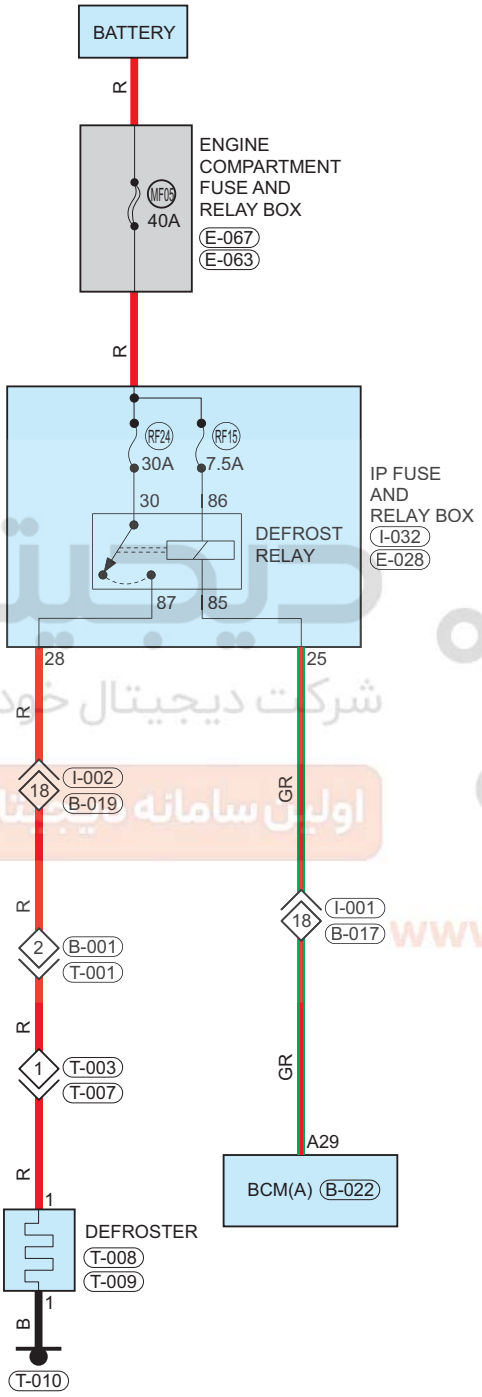

EA13T090730

WWW.DIGITALKHODRO.COM 021 62 99 92 92