S ABS

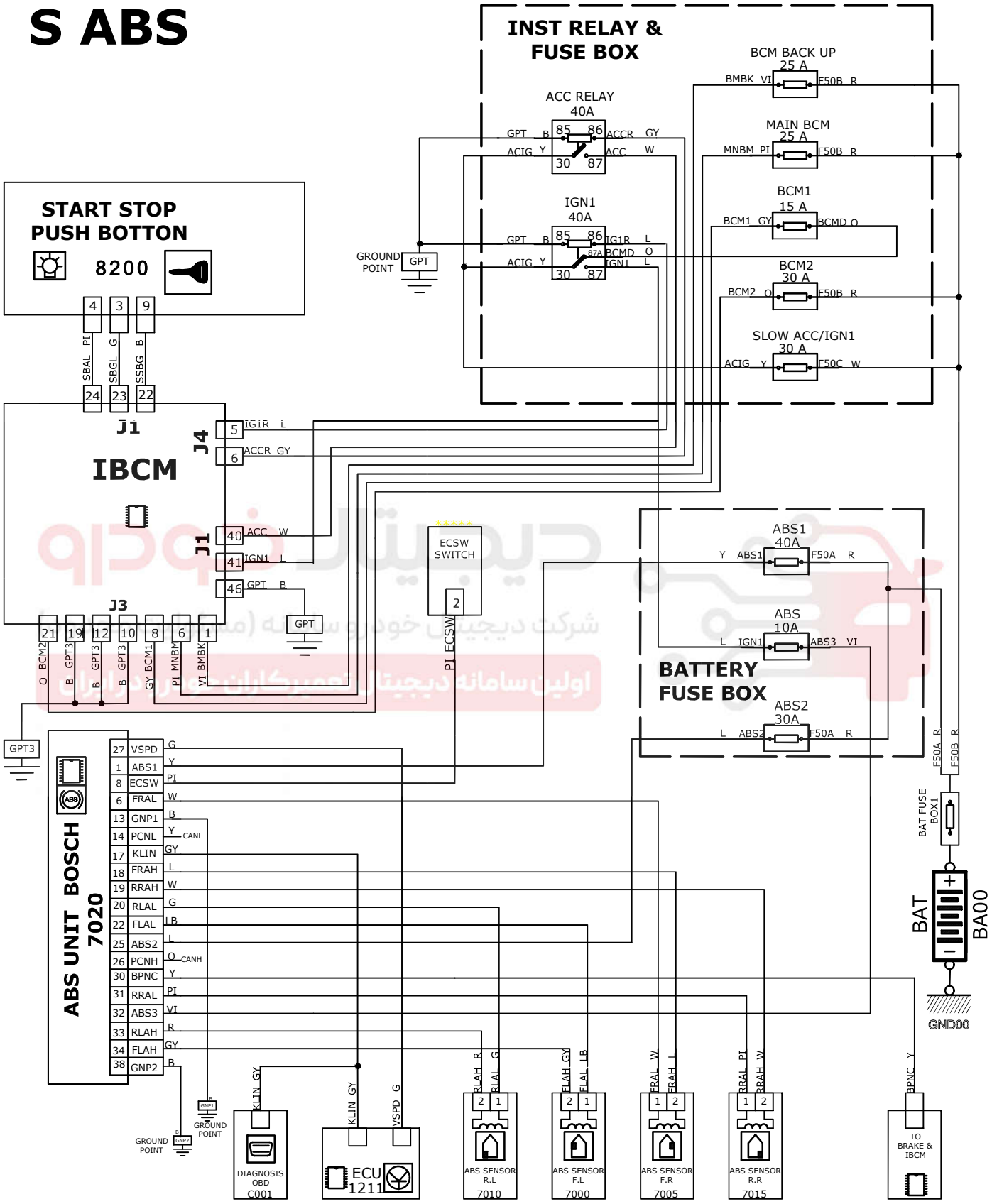
INST RELAY & FUSE BOX
BCM BACK UP 25 A
BMBK VI F50B R
ACC RELAY 40A
GPT B 85 86 ACCR GY
ACIG Y 30 87 ACC W
MAIN BCM 25 A
MNBM PI F50B R
IGN1 40A
GPT B 85 86 IG1R L
87A BCMD O
ACIG Y 30 87 IGN1 L
BCM1 15 A
BCM1 GY BCMD O
BCM2 30 A
BCM2 O F50B R
SLOW ACC/IGN1 30 A
ACIG Y F50C W
GROUND POINT
GPT
START STOP PUSH BOTTON
8200
4 3 9
SBAL PI
SBGL G
SSBG B
24 23 22
J1
IBCM
J4
5 IGiR L
6 ACCR GY
J1
40 ACC W
41 IGN1 L
46 GPT B
J3
21 19 12 10 8 6 1
O BCM2
B GPT3
B GPT3
B GPT3
GY BCM1
PI MNBK
VI BMBK
GPT
ECSW SWITCH
2
PI ECSW
ABS1 40A
Y ABS1 F50A R
ABS 10A
L IGN1 ABS3 VI
BATTERY FUSE BOX
ABS2 30A
L ABS2 F50A R
F50A R
F50B R
BAT FUSE BOX1
BAT
BA00
GND00
GPT3
ABS UNIT BOSCH 7020
27 VSPD G
1 ABS1 Y
8 ECSW PI
6 FRAL W
13 GNP1 B
14 PCNL Y CANL
17 KLIN GY
18 FRAH L
19 RRAH W
20 RLAL G
22 FLAL LB
25 ABS2 L
26 PCNH O CANH
30 BPNC Y
31 RRAL PI
32 ABS3 VI
33 RLAH R
34 FLAH GY
38 GNP2 B
GROUND POINT
GNP1
GROUND POINT
GNP2
KLIN GY
KLIN GY
VSPD G
RLAH R
RLAL G
FLAH GY
FLAL LB
FRAL W
FRAH L
RRAL PI
RRAH W
BPNC Y
DIAGNOSIS OBD C001
ECU 1211
ABS SENSOR R.L 7010
ABS SENSOR F.L 7000
ABS SENSOR F.R 7005
ABS SENSOR R.R 7015
TO BRAKE & IBCM